beisler SEWING

1931-7

Operating Instructions

Content of the operating instructions

The operating instructions are divided into four sections:

Scope of the operating instructions
These operating instructions describe the SHORT SEAM AUTOMAT 1931-7 made by Dürkopp Adler GmbH and apply only to those machine parts and components that are contained in the scope of delivery of the SHORT SEAM AUTOMAT 1931-7.
They do not apply to accessories or machine parts from third parties with which the machine has been equipped or retrofitted. For those components, the operating instructions of the respective manufacturer or supplier apply.

Section A General notices

Section A General notices

Table of Contents

A.1 Notices for safe operation

Important information for the operator!
This machine has been manufactured in keeping with the latest technological developments and is safe to operate. However, it may present potential hazards, particularly if it is operated by inadequately trained personnel or if it is not used correctly or in accordance with its proper use:

- For personnel operating and handling the machine, the operator must prepare written and easy-to-understand instructions for accident prevention based on these operating instructions and make these instructions available in the employee's own language (FRG: Accident Prevention Regulation, UVV VBG 1 § 7, 2).
- Use the operating instructions to familiarize the operating personnel with the functions, operation, and care of the machine and check to see if the operating personnel fully understand these instructions.
- Use the service instructions to familiarize the service personnel with the procedures used to set up and maintain the machine.
- The responsibility for any modifications of the machine that have not been approved by Dürkopp Adler GmbH in writing lies solely with the operator.
- The contents of the operating instructions are subject to change without further notice.
- Concerning translations into foreign languages, the German version of these operating instructions is binding.
- Should you encounter problems that are not mentioned in these operating instructions, please contact your supplier immediately for your own safety. Please do not hesitate to contact Dürkopp Adler if you have any suggestions that help to improve this product.
- **Keep these operating instructions close to the machine so that safety instructions and information on operation, setup, and maintenance are always accessible.**

Warranty
Dürkopp Adler GmbH warrants the safety, proper functioning and repair without charge of the short seam automat 1931-7 for a period of 6 months on the condition that:

- the machine is used exclusively for its proper purpose and serviced in accordance with the information provided in these operating instructions,
- modifications of the machine are carried out only with the prior written approval of Dürkopp Adler GmbH,
- only original spare parts or accessories approved by Dürkopp Adler GmbH are used. For a complete list of all approved spare parts, please contact Dürkopp Adler GmbH.

If the machine is used for more than 10 hours per day in shift operation, the warranty period is reduced to 3 months.
The warranty period starts when the machine is delivered to the purchaser.

A.1 Notices for safe operation

Exclusion of liability
Dürkopp Adler GmbH warrants the faultlessness of the product as set forth by their advertisement, product information and these operating instructions. Other product characteristics are not warranted.
Dürkopp Adler GmbH is not responsible for the profitability or for the correct function of the short seam automat 1931-7 if it is used for purposes other than those defined in the “Proper use“ section.
Dürkopp Adler GmbH is not responsible for damage that arises from the use of non-defined and non-approved spare parts or accessories.

Short seam automat
The short seam automat 1931-7 and all related parts are protected by copyright. Any reproduction of the machine will be prosecuted.

Operating Instructions
These operating instructions are protected by copyright. Rights resulting therefrom, particularly reprint, photomechanical or digital
post processing or reproduction by other means and the extraction of figures or tables as well as translation, even in part, are subject to the written consent of Dürkopp Adler GmbH.

A.1 Notices for safe operation

Important information for the operating personnel!
Please note that any work on the SHORT SEAM AUTOMAT 1931-7 may only be carried out by trained operating personnel:

- **Operating personnel are designated as persons:**
  who have been given initial instructions for sewing automats and who have been trained for the operation and handling of the SHORT SEAM AUTOMAT 1931-7 on the basis of these operating instructions,
  who have been informed about potential risks arising from their work with the machine,
  who are capable of assessing their work and of recognizing potential hazards during work thanks to their occupational experience and the instruction they received on the safety regulations.
- The cleaning of the machine or of machine parts must be performed only by personnel who have been informed about potential hazards that may arise during the cleaning work.
- Read the **operating instructions** carefully prior to the initial operation of the SHORT SEAM AUTOMAT 1931-7 so that you can make full use of the advantages of the machine and prevent damage.

Important information for the service personnel!
Please note that any service work on the SHORT SEAM AUTOMAT 1931-7 may only be carried out by adequately qualified specialists:

- **Specialists are designated as persons:**
  who have acquired their expertise through special training in mechanical or electrical engineering or through special advanced training or comparable qualification,
  who have acquired the knowledge required to perform all work steps necessary for setting up and servicing the SHORT SEAM AUTOMAT 1931-7 in a training course provided by Dürkopp Adler GmbH, who are capable of assessing their work and of recognizing potential hazards during work thanks to their occupational experience and the instruction they received on the safety regulations.
- Before performing any service work on the SHORT SEAM AUTOMAT 1931-7, carefully read the **operating instructions in their entirety** so that you can make full use of the advantages of the machine and prevent damage.

A.1 Notices for safe operation

A.1.1 Symbols used in the operating instructions

WARNING!

is used if non-observance may cause serious or even lethal injuries.

CAUTION!

is used if non-observance may cause medium to minor injuries or property damage.

NOTICE!

is used for user tips and useful information.

A.1.2 Symbols used on the machine

WARNING: DANGER!

Caution! Observe operating instructions.

WARNING: HIGH VOLTAGE!

Caution! Prior to opening, pull out power plug.

A.1 Notices for safe operation

A.1.3 General safety instructions

Proper use
- The SHORT SEAM AUTOMAT 1931-7 is sewing machine. It is to be used for top-stitching fly pieces.
- The machine is suitable for processing all conventional materials used in outerwear.
- The machine has been designed for permanent operation in industry.
- The SHORT SEAM AUTOMAT 1931-7 has been tested for electromagnetic compatibility and is suited for installation in industrial operating rooms.

Improper use
- The SHORT SEAM AUTOMAT 1931-7 must not be operated in rooms that do not comply with the location requirements.
- The SHORT SEAM AUTOMAT 1931-7 must not be operated in the vicinity of devices or systems that produce strong magnetic fields as the correct function of the program control may otherwise be impaired.

Safety devices
The SHORT SEAM AUTOMAT 1931-7 is equipped with a circuit breaker (**Program Stop key)** that stops all machine movements and the sewing process when actuated manually.

Electrical connection
The power supply to the machine is established via a properly grounded electrical connection with:
- 230 V ± 10 %, 50/60 Hz, grounding plug.
- Fusing: 16 A
- Power consumption: 1.3 kW

Compressed air supply
The machine must be supplied by an on-site compressed air source.
- Operating pressure: 6 bar.
- Compressed air quality: oil-free
- Compressed air consumption: 16 NL

Requirements on storage and setup location
Setup in sheltered and closed rooms.
- Room temperature from 10 °C to 45 °C
- Relative humidity: no more than 80 %

Disposal
- Please discard the packaging material in accordance with existing disposal directives. Section C1, Delivery of the machine, contains a list of the packaging materials used.
- The machine contains reusable materials. Therefore, when discarding the machine, ask your local magistrate or community office about the possibilities of recycling rather than simply disposing of it at the next landfill.

A.2 Notes

Section B Instructions for use

Section B Instructions for use

Table of Contents

B.2 Functions of the machine

B.1.1 Functional units

All functional units of the SHORT SEAM AUTOMAT 1931-7 are assembled to the height-adjustable stand and freely accessible.

Transport and sewing unit

1 Holding stamp
2 Linear rail with drive motor
3 Reel stand
4 Sewing head
5 Guide laser
AT Main clamp
AK Fabric clamp
BK Stop rail

Control

6 Control panel
7 Memory stick

Emergency switch

8 Program Stop key

Fig. 1

Worktable

AN Height-adjustable table leg
AO Working plate with sliding plate for the vacuum
AS Storage table
BT Bundle clamp

Power supply

9 Main switch, emergency stop switch
AL Switch box
AM Sewing motor control

Compressed air/vacuum supply

AR Vacuum pump (optional) with vacuum switch
BL Compressed air device

Operating switches

AP Foot button bundle clamp
AQ Foot button machine cycle

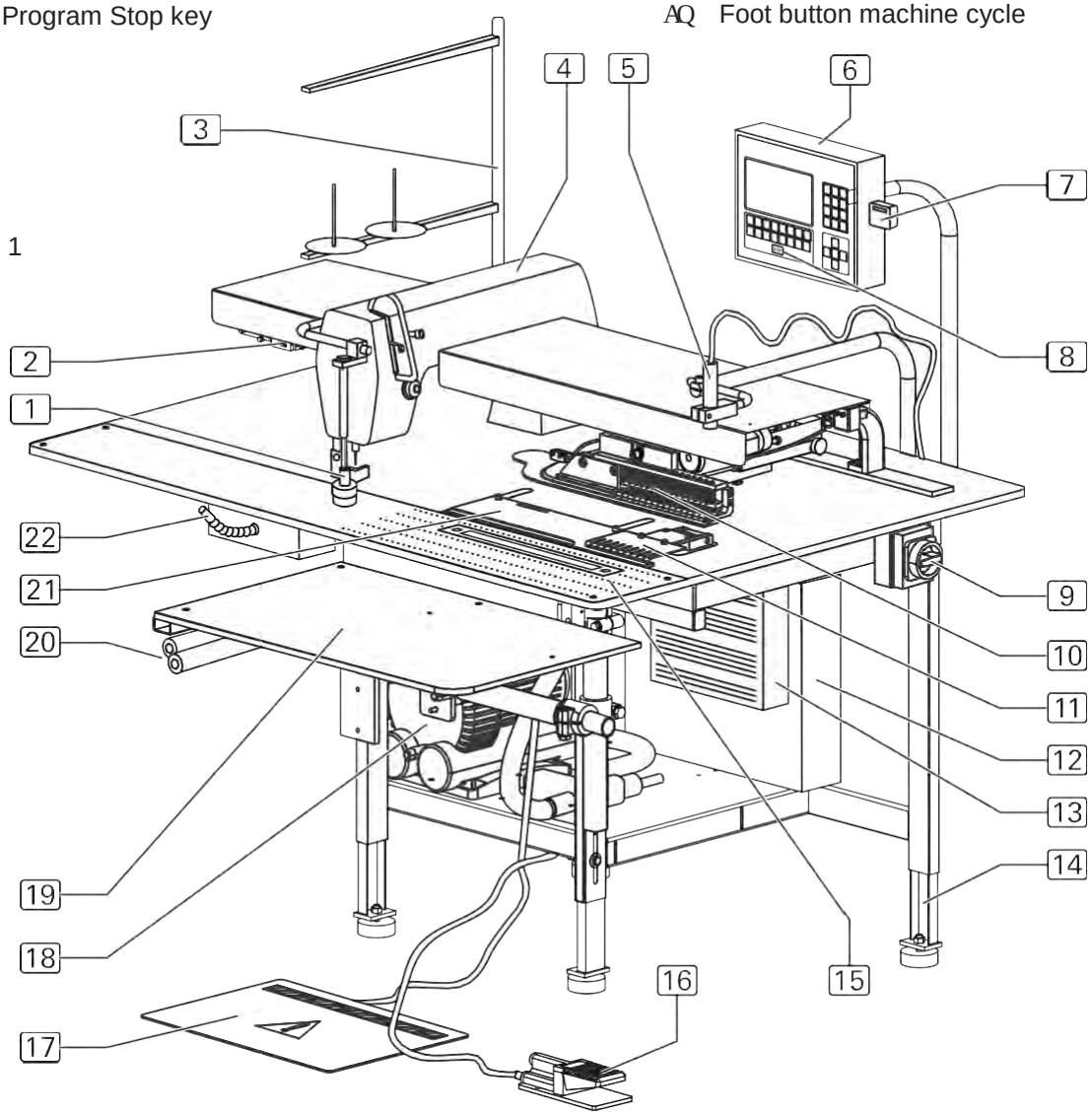

B.2 Functions of the machine

B.2.1 Functional sequence

The short seam automat 1931-7 allows for the automated top-stitching of left fly pieces in men's trousers production. The trousers are moved into position manually and then held in place on the working plate by the vacuum and the holding stamp. Next, the transport system feeds the trousers automatically to the sewing head, where they are sewn and ejected.

B.2.2 Line-up and alignment

Bundle clamp

The sewing pieces to be processed are clamped into the bundle clamp as bundles and kept ready for sewing. The bundle clamp is operated with compressed air and controlled by the foot button (Fig. 1).

Stop, **Fig. 2:**

The stop rail 2 is used to ensure the parallel alignment of the seam 6 .

Guide laser 1

The guide laser is used as a tool for lining up the sewing piece with the correct end point of the seam. The guide laser outputs a red marking line 5 that is used to line up the sewing piece 4 at the stop rail 2 . The fabric clamp 3 holds the waistband down.

Adjusting wheel stitch width, **Fig. 3:**

The adjusting wheel 1 is used to define the necessary stitch width relative to the stop rail of the worktable. This setting determines how far the main clamp 2 will move beyond the stop rail to pick up the sewing piece and transport it to the sewing unit. The adjusting wheel allows for four settings which have been matched with the four seam programs pre-programmed at the factory:

Stitch width 30 mm
Stitch width 32 mm
Stitch width 35 mm
Stitch width 37 mm

Fig. 2/3

Fig. 2

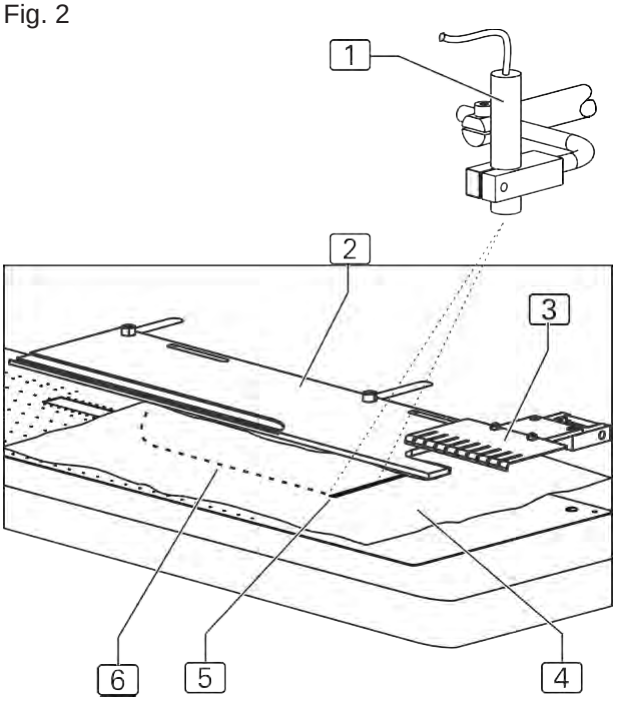

Fig. 3

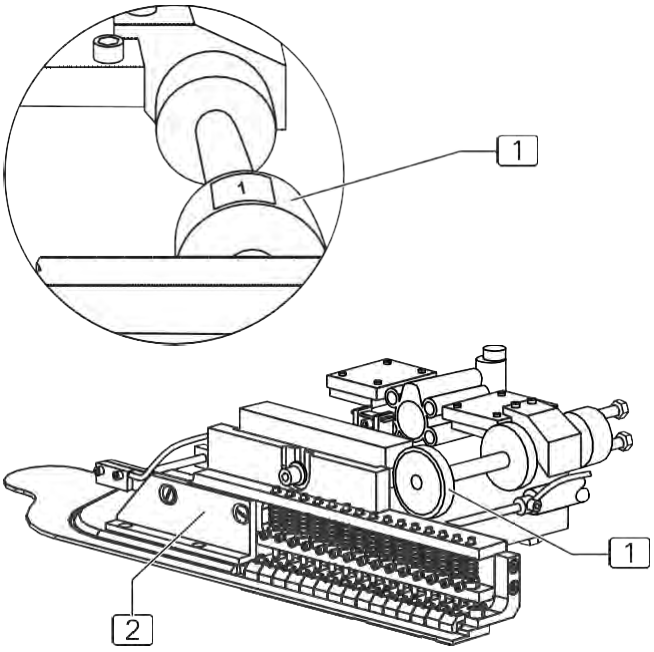

B.2 Functions of the machine

B.2.3 Transport and sewing

Fig. 4

Vacuum

Once the sewing piece 3 has been lined up with the stop rail and the red marking line of the guide laser 6 , it will be sucked up to the workplace across a wide area.

Holding stamp

Simultaneously with the vacuum, the holding stamp 2 holds the sewing piece in place on the working plate at a different location. To do so, it lowers and presses the sewing piece against the working plate.

Fabric clamp

The fabric clamp 5 holds down the waistband until the sewing piece is picked by the main clamp.

Main clamp

The main clamp 4 picks up the sewing piece 3 for the transport to the sewing head. To do so, it moves forward to the stop rail and is positioned there. The exact position of the main clamp above the sewing piece is measured by the photocells at the reflective stripe on the stop rail.

When in position, the main clamp is lowered onto the sewing piece. The fixing aids vacuum and holding stamp are disabled:
The holding stamp is lifted, and the vacuum is switched off.
The main clamp slides the sewing piece from the stop rail on the sliding plate to the sewing head.
The main clamp is a compensating clamp that evens out the differences in fabric thickness at the waistband.

Sewing head

The sewing head 7 performs only the functions sewing stitch and thread cutting. All other functions, such as seam curve route or determining the seam beginning and the seam end point, are acquired by the sensor system and controlled by the program control in accordance with the set values.
The thread supply and the thread feed to the sewing head are monitored by sensors (needle thread monitor and remaining thread monitor bobbin). The reel stand 1 can hold two thread reels.

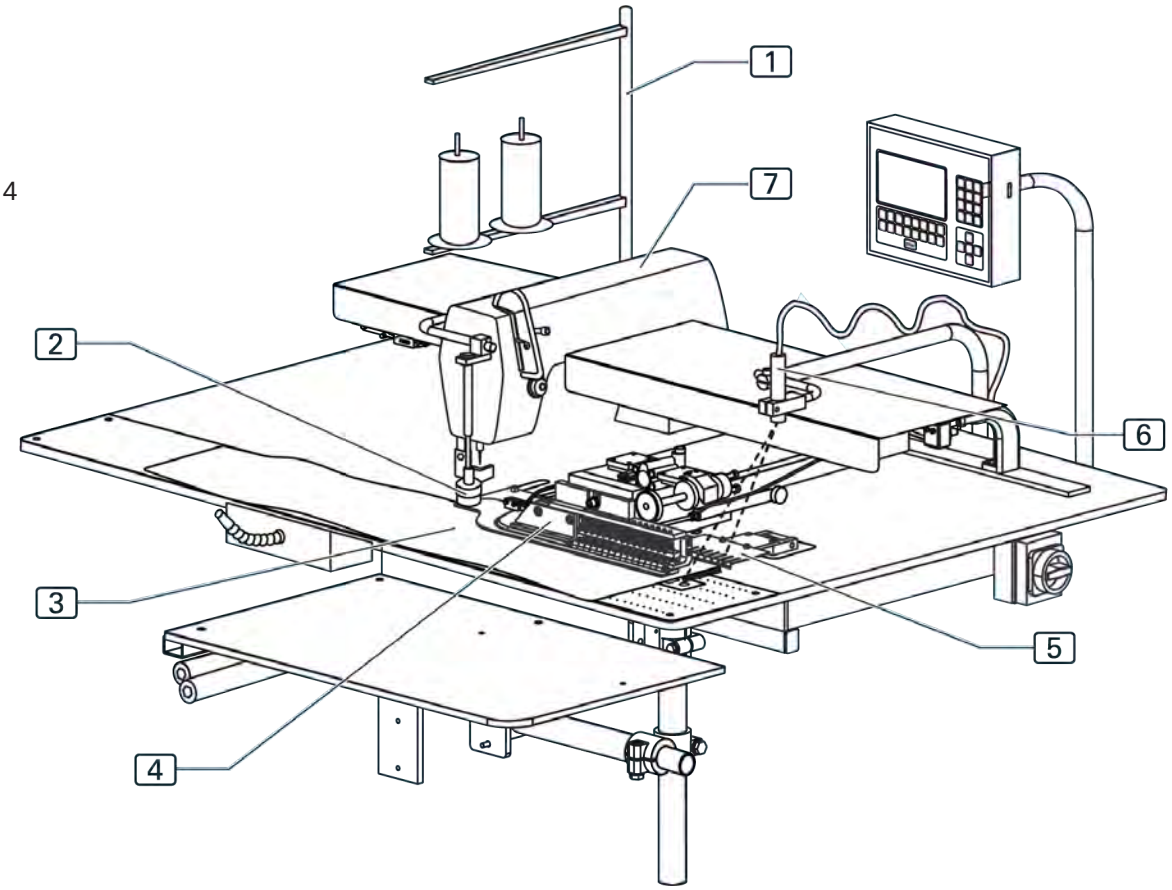

B.2 Functions of the machine

B.2.4 Switches

The short seam automat is equipped with three different types of switches:

- Emergency switch for stopping a seam program,
- Power switch for power supply,
- Control switches for controlling the machine cycle.

Power switch

Main switch

The main switch 2 is used to turn the power supply of the machine on or off. For safety reasons, the machine must be turned off using the main switch when it is standing still for an extended period; in this case, all functional units are deactivated. The main switch also serves as an additional Emergency Stop switch.

Vacuum pump switches

The switches 5 and 6 are used to switch the vacuum supply of the suction system on and off.

- 5 Vacuum pump ON
- 6 Vacuum pump OFF

Fig. 5

Emergency switch

Program Stop key

A press of the Program Stop key 1 will stop all machine movements and the sewing process immediately.

The control program performs a reset.

A press of the foot button 4 moves the machine to the zero position. After that, the machine is ready for operation again.

Control switches

Foot button bundle clamp

When this foot button 3 is depressed, the bundle clamp opens. When the foot button is released, the bundle clamp closes.

Foot button machine cycle

The foot button machine cycle 4 is used to control the individual operating steps of the SHORT SEAM AUTOMAT or for starting the fully automatic machine cycle.

Fig. 5

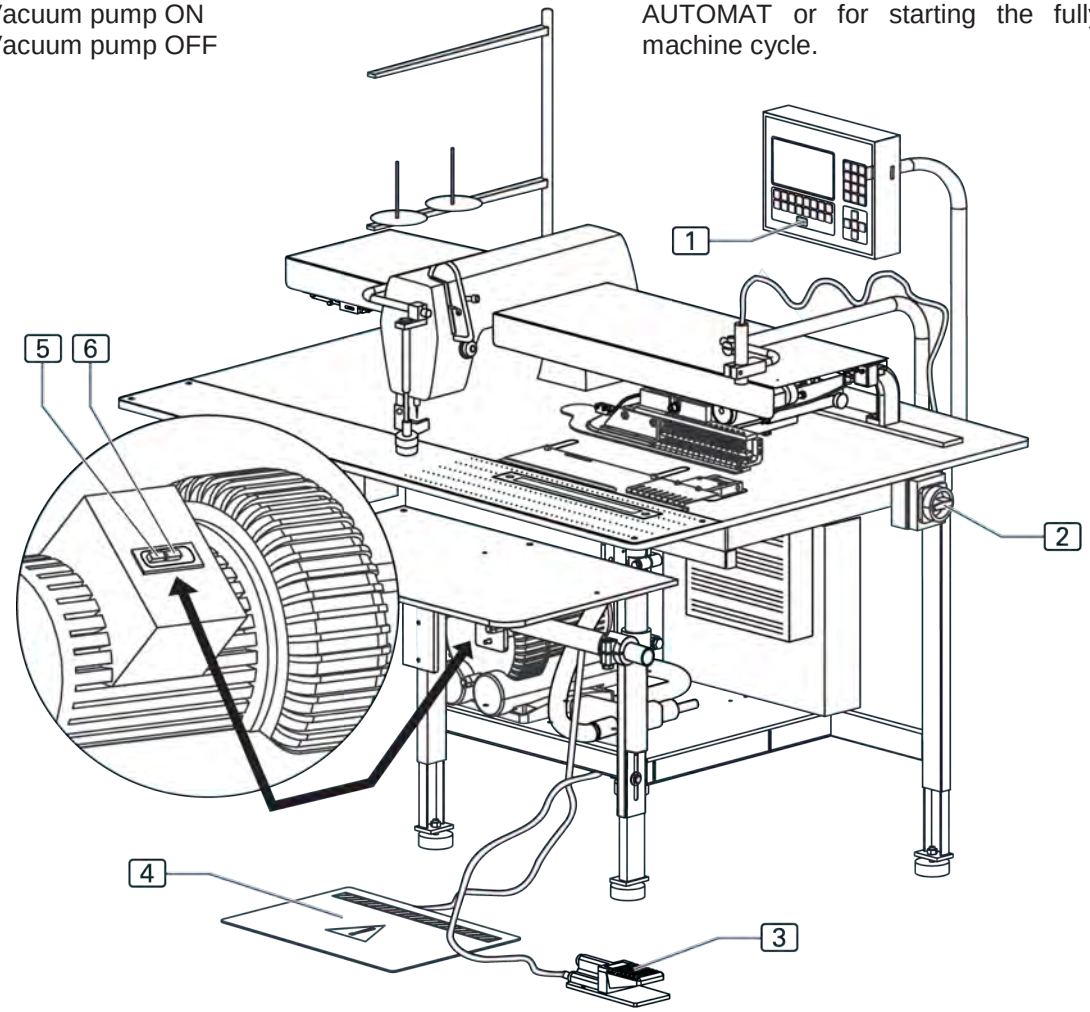

B.2 Functions of the machine

B.2.5 Control panel

Display

During the operation of the machine, the display 1 shows the values of the selected seam program. When menus were called up, the menu symbol or the corresponding parameters of the function are displayed.

Display screen

8 Seam symbol

9 Seam program description (a seam program may consist of several seams)

AT Seam number of the seam program

AK Seam description

AL Display field for the activated seam functions

AM Bar of requestable Special Parameters submenus

Slot 3 for memory stick

The memory stick is the storage medium for backup copies of all program control data. Programs can be copied to and stored on the memory stick and loaded into the machine control if required.

Program Stop key

If the Program Stop key 6 is pressed during the machine cycle, all machine movements and the sewing process are stopped.

Numeric keypad

All variable number values are entered using the numeric keypad 2 .

By pressing the M key, you can call up the desired seam programs.

By pressing the P key, you can call up submenus, confirm inputs and exit the programming mode.

Arrow keys

Pressing the arrow keys 4 "Up" and "Down" will move the cursor one line up or down in the selected menu.

Pressing the “Right” or “Left” arrow key will either mark the desired parameter or, if the parameter list comprises several pages, browse forward or backward.

Function keys

The function keys 7 are used to call up the menus on the selected level for setting or changing machine functions.

Fig. 6

Fig. 6

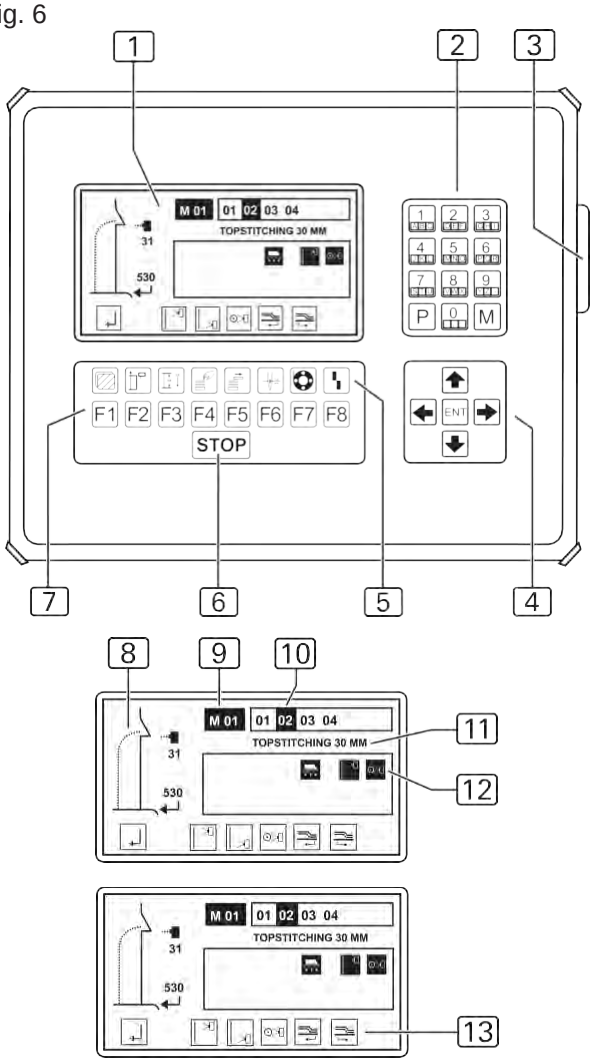

Symbol bar

The symbol bar 5 indicates the menus that can be called up using the function keys directly from the start level.

All other functions of the machine can be set or changed by selecting the corresponding menus on the different program levels. The corresponding symbols appear on the display of the control panel.

B.3 Operation

B.3.1 Safety instructions for operation

Machine cycle:

WARNING - Machine cycle intervention!

The machine is driven by electric motors and by compressed air. Any attempt to stop the moving parts of the machine or to tamper with the movements by hand may cause severe injuries.

- **• Keep hands away from the machine while the machine cycle is in progress!**
- **• During the sewing process, keep your hands away from the operating range of the needle!**
- **• If a disturbance is encountered during the machine cycle, press the Program Stop key immediately!**

Work clothing:

CAUTION - Unsuitable work clothing!

The moving parts of the machine may catch and draw in the loose parts of clothing, which may cause severe injuries to anyone who is drawn into the operating range of the machine.

- **When operating the machine, do not wear loose-fitting or open clothing!**
- **Make sure that sleeves are tight-fitting and properly closed!**

Handling the guide laser:

CAUTION - Damage to the retina!

If the eye is directed toward the laser beam for an extended period of time, the retina may become damaged.

- **Avoid looking into the laser beam directly!**
- **Do not direct the laser beam into eyes!**

CAUTION - Change of the laser beam!

An optical change of the laser beam may increase its luminous intensity and cause eye injuries.

- **If the direction of the laser beam is changed, if the laser beam is misadjusted or if the laser optics are damaged, turn the machine off and shut it down.**
- **Do not allow optical equipment (burning glasses or lenses) to interfere with the laser beam path.**

B.3 Operation

B.3.2 Preparing the machine

Prior to the start of production, check the supply connections, connect the machine to the compressed air and power supply systems and prepare the sewing head.

1. Insert the needle, thread yarn for the needle thread and insert the bobbin for the hook thread into the sewing head; see the manufacturer's operating instructions of the sewing head included in the accessories of the machine.

2. Connect the machine to the compressed air supply. To do so, insert the plug-in connector 7 of the compressed air hose into the compressed air receptacle in the operating room. The pressure of the compressed air is reduced to the required operating pressure of 6 bar by a pressure reducer 8 . Check the manometer 9 to see if the correct operating pressure is set. The pressure reducer is installed at the side mounting wall of the worktable.

Fig. 7

Setting pressures:
The operating pressures are set at the 3 pressure regulators:

- to increase the pressure, rotate the switch clockwise,
- to reduce the pressure, rotate the switch counterclockwise.

Function of the pressure regulators:

- Pneumatic spring 1: approx 0.4 MPa, controls the traveling speed of the clamp to the stop.
- Downholder 2: approx 0.2 MPa, controls the pressure of the pressure piece on the clamp.
- Clamp pressure 3: 0.4 - 0.5 MPa, controls the pressure of the clamp on the sewing material.

☞ **NOTICE - Vacuum supply!**

If the machine is equipped with the optional vacuum pump, the vacuum supply is now ready for operation. If the machine is prepared for the on-site vacuum supply system, the on-site vacuum hose 6 must be connected to the sleeve 4 of the vacuum valve 5 .

Fig. 7

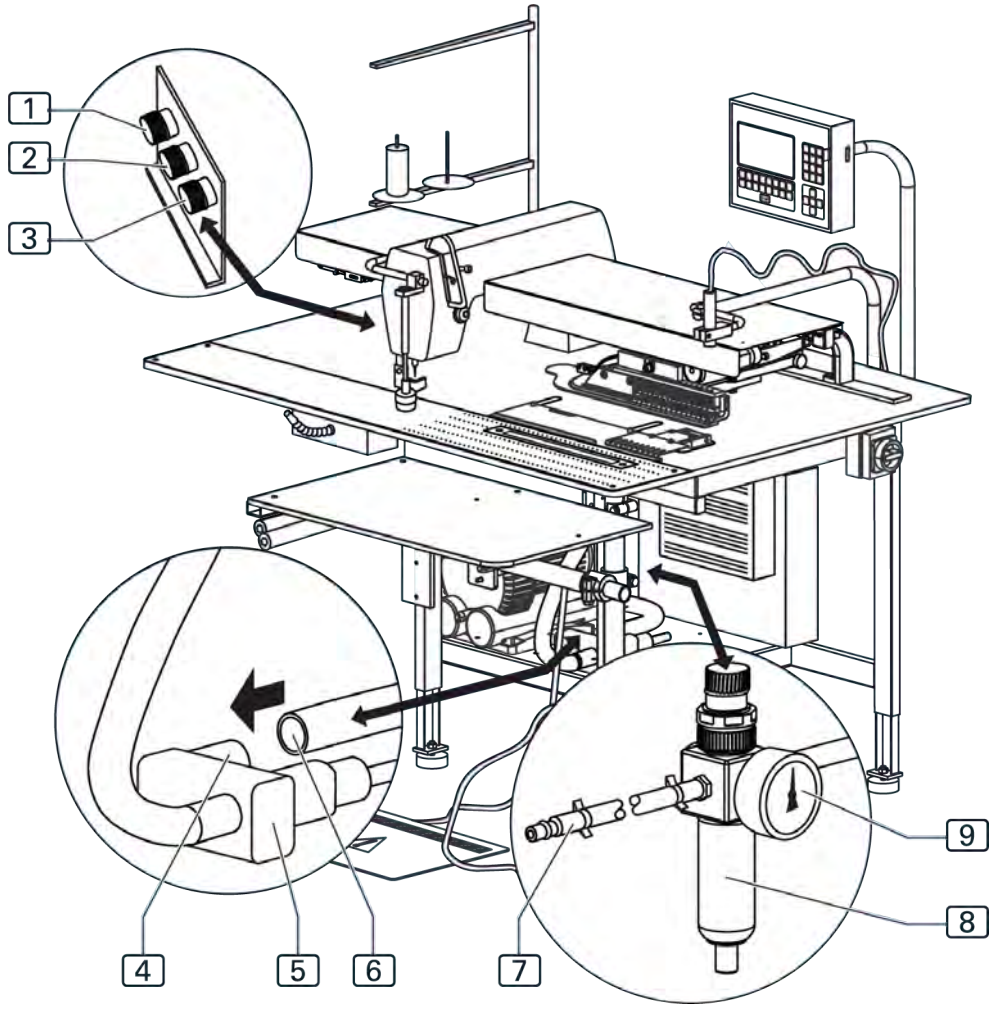

B.3 Operation

B.3.2 Preparing the machine

3. Connect the machine to the power supply.

WARNING - Electric shock:

Contact with current-carrying components may cause a lethal electric shock. Check plug and power cable before connecting the machine to the power supply system.

- **Do not use damaged plugs, sockets or cables to connect the machine to the power supply system!**
- The machine is connected to a mains voltage of 230 V ±10 % at 50/60 Hz.
- Before connecting the machine to the power supply system, check to see if the ratings of the power supply system in the operating room correspond with the ratings on the type plate at the rear of the machine.
- If the ratings for voltage (V) and maximum current (A) do not match, the machine must not be connected.
- Insert the grounding plug into a properly grounded and fused power socket.
- Make sure that the power cable is not subject to tensile or pressure forces.

Fig. 8

4. Switch on the machine at the main switch 1 . Set the switch to position **I**.

5. Switch on the vacuum pump of the machine. Press the switch 2 or open the on-site vacuum source.

Fig. 8

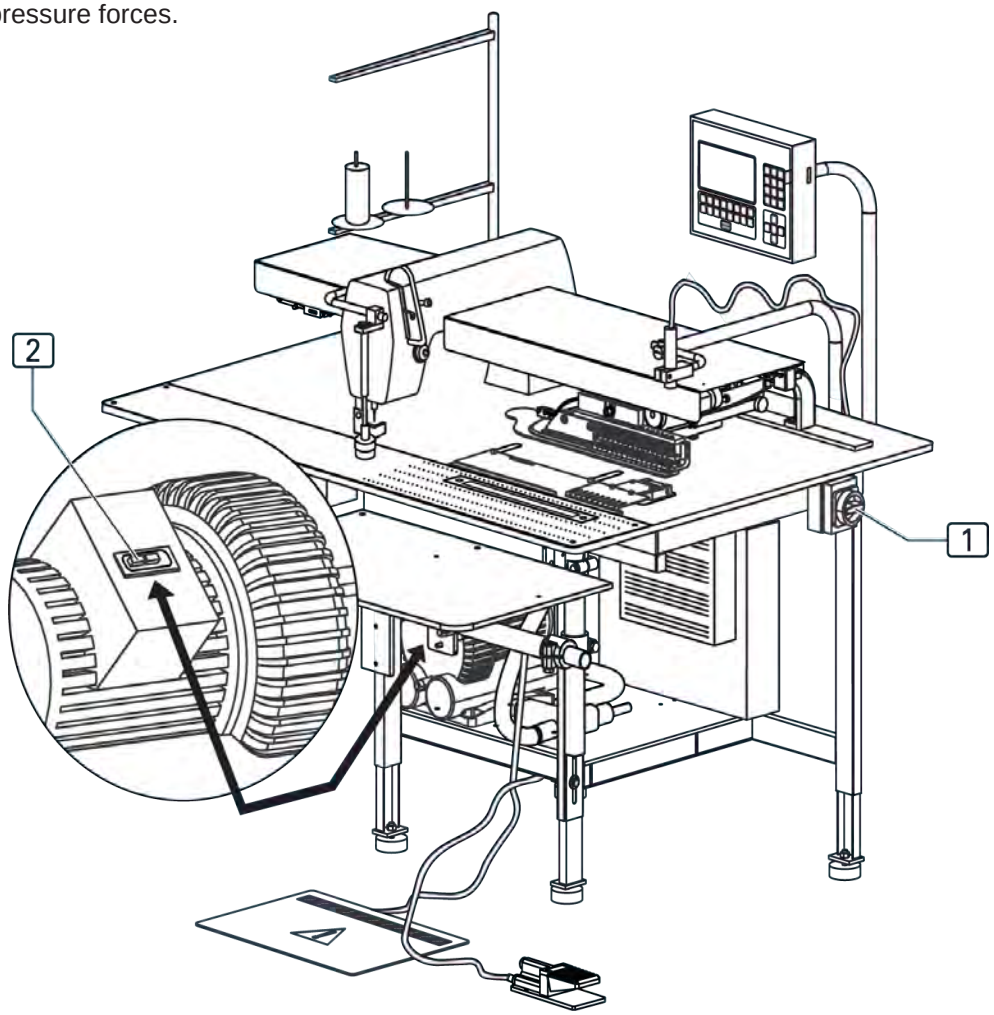

B.3 Operation

B.3.3 Selecting the seam program

After the machine has been switched on and the control program has started up, the seam program that had been selected last is active.
Fig. 9: The seam programs 1 are stored in the memory (**M**). The program control memory can store up to 50 seam programs (**M 01 - M 50**). For each seam program, up to six seam numbers 2 (01, 02, 03, 04, 05, and 06) can be assigned. It is possible to assign a maximum of 99 seam numbers.

The program control of the machine is equipped at the factory with a standard program:

- Seam program **M 01** with four different seams for the automated top-stitching of fly pieces. The **seams (01 - 04)** signify **different stitch widths**.

A seam program can be combined with one seam, with several seams or with all six possible seams at the same time.
If a seam program with several seam numbers is called up, the seams are processed one at a time in the order of the seam numbers from left to right.
The order of the seam number is freely selectable.
It is important to set the **adjusting wheel** of the main clamp to the seam number of the seam you wish to sew first (left position in the line of the seam numbers).

1. Choose a seam program on the control panel.

Call up the memory:

- Press the [M] key

Select the number of the seam program, e.g. 01:

- Press the [0] and [1] keys

The selected program is activated immediately.

2. Select the seam number of the desired seam. Move the cursor to the seam number:

- Press the [←] or the [→] key.

Confirm selection:

- Press the [ENT] key.

3. Set the adjusting wheel of the main clamp to the selected seam number.

Fig. 9/10

Fig. 9

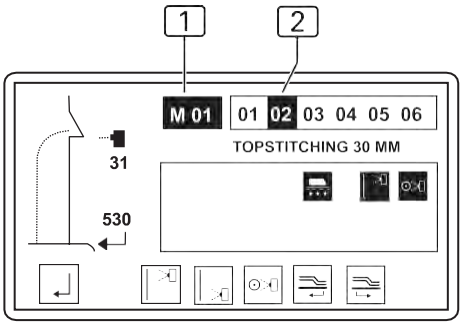

Fig.10

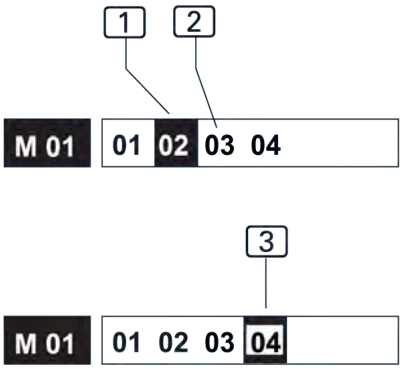

Fig. 10: Display during seam number selection:

1 Active seam number
2 Passive seam number
3 Seam number is selected

B.3 Operation

B.3.8 Selecting the double seam function

Fig. 11

The double seam function makes it possible to sew two seams in parallel with only one needle. The machine is capable of producing double seams with a stitch width between 28-46.4 mm.
For this purpose, the machine comes with 3 rollers that need to be inserted depending on the selected stitch width. The seam distances of the three included rollers are: 3.2mm, 4.8 mm, and 6.4 mm.

To insert a different roller:
1. Flip the cover 2 up.
2. Loosen the screw on the roller 1 .
3. Remove the roller 1 .
4. Fit the desired roller 1 .
5. Tighten the screw.
6. Flip the cover 2 down.
7. Select the double seam function on the control panel (see Section B, Selecting the seam program).
8. Select the size of the inserted roller 1 .
9. Set the desired stitch width.

Fig. 11

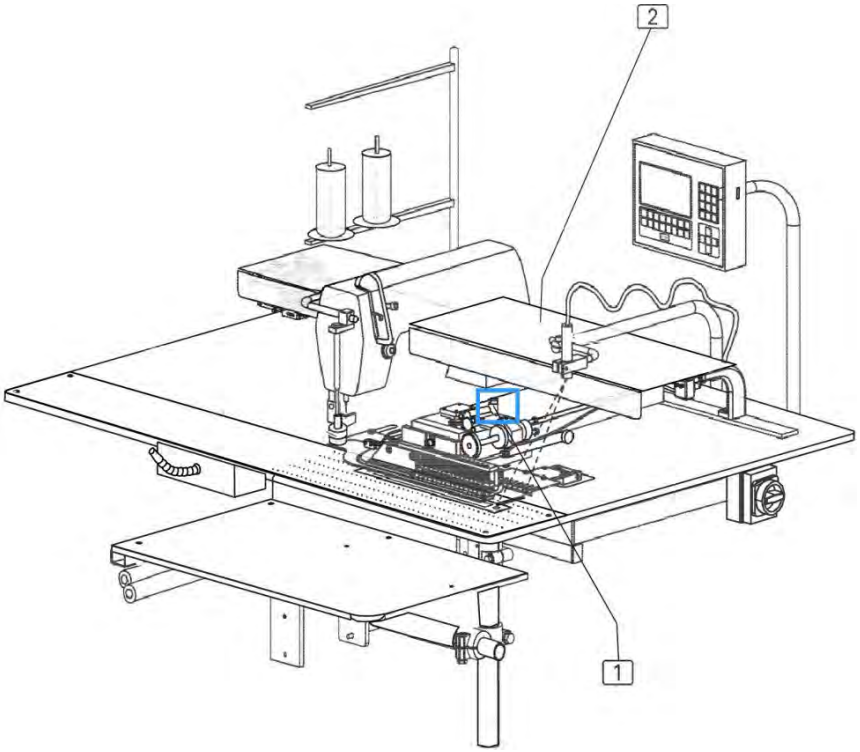

B.3 Operation

B.3.9 Aligning the sewing piece

The pieces of the front trousers are held ready by the bundle clamp at the storage table and aligned to be stitched down on the worktable. The alignment of the trousers depends on the equipment of the machine.

Equipment for endless zippers with slider (only left half of the zipper present)
Alignment using the function “Photocell at seam beginning”: If the "Photocell at seam beginning" function is enabled, the sewing piece is aligned with the stop rail and the laser marking line.

1. Open the bundle clamp. Press and hold the foot button “bundle clamp” while the trousers are sorted and prepared in the bundle clamp.
2. Close the bundle clamp. Take your foot off the foot button.
3. Align the seam such that it runs parallel to the stop rail 2 . To ensure the correct end point of the seam, line up the sewing piece exactly at the red laser marking line 3 .

NOTICE - Reflective stripe!

The position of the main clamp to the sewing piece is determined by the photocell. The photocell responds to light that is reflected by a reflective stripe 1 .

Equipment for cut-to-length zippers with slider and closure
Alignment using the "Fixed insertion distance" function:
If the "Fixed insertion distance" function is enabled, the front trousers are aligned with the stop rail at the clip for the fly.

1. Open the bundle clamp. Press and hold the foot button “bundle clamp” while the sewing pieces are sorted and prepared in the bundle clamp.
2. Close the bundle clamp. Take your foot off the foot button.
3. Align the front trousers at the clip (fly) 5 of the stop rail and, for the parallel run of the seam, with the longitudinal side 6 of the stop rail. The correct seam end point is captured by the sensor system linear scan 4 and controlled by the program control in accordance with the set values.

Fig. 12

Fig. 12

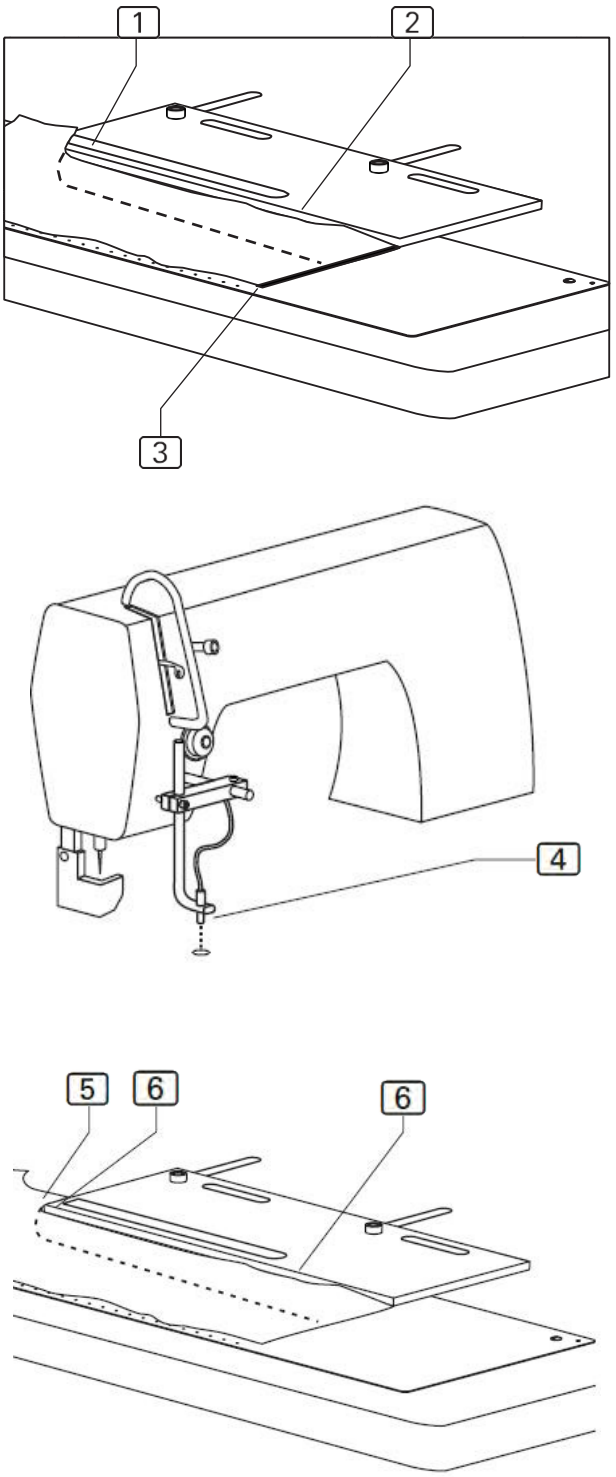

B.3 Operation

B.3.10 Starting the machine cycle

The machine cycle can be started in three different sequences (mode 00, mode 01, and mode 02). The factory default is mode 01, which starts a largely fully automatic machine cycle.

Controlling the machine cycle in mode 00 (fast version):

1. Line up the sewing piece.
2. Press and hold the foot button machine cycle:
   - The vacuum is switched on.
3. Release the foot button:
   - The holding stamp is lowered.
   - The further machine cycle is fully automatic: The main clamp picks up the sewing piece and transports it to the sewing head. The sewing piece is stitched down and ejected. The main clamp returns to the start position. The next machine cycle starts.

☞ **NOTICE - Supplying sewing pieces!**

If the fully automatic machine cycle was started, the next sewing pieces can be lined up already. The foot button remains deactivated until the main clamp reaches its start position and the stop rail moves forward; after that, the next machine cycle can be started.

Controlling the machine cycle in mode 01 (slow version):

1. Line up the sewing piece.
2. Press and hold the foot button machine cycle:
   - The vacuum is switched on.
3. Release the foot button:
   - The holding stamp is lowered.
4. Press the foot button briefly:
   - The main clamp picks up the sewing piece.
5. Press the foot button briefly:
   - The further machine cycle is fully automatic: The main clamp transports the sewing piece to the sewing head, The sewing piece is stitched down and ejected. The main clamp returns to the start position. The next machine cycle starts.

Another option to control mode 01 is as follows:

1. Press and hold the foot button machine cycle:
2. Release the foot button:
   - The holding stamp is lowered.
3. Press and hold the foot button:
   - The main clamp picks up the sewing piece.
   - The further machine cycle is automatic. When the main clamp moves to the sewing head, the foot button can be released.

☞ **NOTICE - Supplying sewing pieces!**

When the sewing piece is transported to the sewing head, the next piece can be lined up.
The foot button remains deactivated until the main clamp reaches its start position and the stop rail moves forward; after that, the next machine cycle can be started.

Controlling the machine cycle in mode 02:

1. Line up the sewing piece.
2. Press and hold the foot button machine cycle:
   - The vacuum is switched on.
3. Release the foot button:
   - The holding stamp is lowered, and the sewing piece is picked up by the main clamp.
4. For each further operational step of the machine, depress the foot button.

☞ **NOTICE - Supplying sewing pieces!**

When the sewing piece is transported to the sewing head, the next piece can be lined up.

B.3.11 Resetting the loading process

This function depends on the selected machine cycle mode. It refers only to machine movements that can be executed before the start of the automatic process. The machine movements can be reset immediately to the initial position by using the activation command.

- Press the F8 key

B.3 Operation

B.3.12 Stopping a seam program

1. Press the Program Stop key.
   A press of the Program Stop button key stop all machine movements and the sewing process immediately.

To restart the machine after a program stop, all functions must be reset, and the machine cycle must be returned to the zero position.

B.3.13 Moving the machine to the zero position

Prior to starting production, after machine tests or after corrections to seam programs, the machine must be returned to the zero position for starting the machine cycle:

- Press the Program Stop key 2 times.

B.3.14 Turning the machine off

For extended work intermissions, the machine must be turned off completely.

1. Turn the vacuum supply off by moving the vacuum switch to position 0.
2. Turn the power supply off by moving the main switch to position 0.

B.3.15 Periodic cleaning of the machine

The machine must be cleaned after large production series, or at least once a day, whichever occurs first.

CAUTION - Risk of injury!

If the machine is put in motion accidentally, persons in its direct vicinity may be caught by moving parts, which may cause injuries.
Prior to any cleaning work, disconnect the machine from the power supply!

- **Switch off the machine at the main switch.**
- **Remove the power plug from the socket and protect it from accidental reconnection.**

Periodic cleaning:

1. Remove fabric residues.
2. Using compressed air, blow off dust and thread residues at the sewing head, at the working plate, at the main clamp and at the linear rail.

Section C Service instructions

Section C Service instructions

Table of Contents

C.1 Delivery of the machine

C.1.1 Packaging

The machine is delivered in a solid packaging box on a pallet. All packaging materials can be separated and reused.

- Pallet made of pine wood
- Packaging box made of plywood / transport carton
- Polyethylene film (PE)

☞ **NOTICE - Transport lock!**

During shipping, moving machine parts are protected with a transport lock (cable ties). The positions of all parts fitted with a transport lock are marked with red labels.
After the machine has been set up and aligned, the transport locks must be removed.

☞ **NOTICE - Transport damage!**

If any damage presumably caused by incorrect transport is found when the machine is unpacked, please contact your supplier immediately.

C.1.2 Scope of delivery

The machine is delivered ready for operation. The scope of delivery comprises:

Short seam automat with sewing head:

- The machine is equipped with several customer-specific accessories. For checking the exact layout, the information on the delivery note is authoritative.
- Service kit with machine oil.

Control panel and program control:

- Pre-installed, ready-for-use control panel.
- Memory stick with factory-programmed standard seam program.

Technical documentation:

- Operating instructions
- Service instructions
- Programming instructions

C.2 Requirements on storage and setup location

C.2.1 Floor quality

The floor of the room where the machine is to be set up must have a sufficient surface strength. The location of the machine must be free of vibrations.
If several machines are to be installed in one room, the static load-bearing capacity of the ceiling must be considered.

Weight:
- Machine with accessories approx. 200 kg

C.2.2 Interior climate

Climatic requirements for the operating floor: The machine may only be stored or operated in closed rooms.
• Room temperature: +10 °C to +45 °C
• Relative humidity: no more than 80 %

C.2.3 Floor space required

For operation during production and for service tasks, the machine must be freely accessible from all sides. On all sides, there must be a minimum clearance of 1 m.

Machine dimensions:
- L x W x H 1700 x 1400 x 1700 mm

☞ **NOTICE - Electromagnetic interference!**

The machine must not be installed in the immediate vicinity of devices or electrical components (e.g. transformers) that generate a strong magnetic field, as the correct function of the program control may otherwise be impaired.

C.2.4 Supply connections

The machine requires on-site power, compressed air, and - if the machine is not equipped with a vacuum pump - vacuum sources.

Electrical connection:
The power supply to the machine is established via a properly grounded electrical connection with:
- Grounding plug 230 V ± 10 %, 50/60 Hz
- Fusing 16 A

☞ **NOTICE - Voltage spikes!**

The correct function of the machine requires that the power system supply a constant current. Voltage spikes may particularly impair the stability of the program control.

Compressed air supply:
The on-site compressed air supply system must meet the following requirements:
- Operating pressure 6 bar
- Compressed air quality oil-free
- Compressed air consumption 4.16 NL/AT

Vacuum source:
The on-site vacuum source must meet the following requirements:
- Suction power at least 130 m³/h

C.3 Commissioning

C.3.1 Aligning the stand

After the machine has been set up at the desired location, the stand must be aligned:
- Set the stand to the required height.
- Align the stand horizontally on all sides.

Adjusting the table height:
1. **Fig. 1:** Lift the machine using the lifting device. To do so, connect the lifting device at the lift points (arrows) below the cross members. If the machine is equipped with optional transport rollers, release the brakes before lifting.
2. **Fig. 2:** Loosen the lock screws 2 on all guide rails.
3. Pull the table legs 3 out to the desired length and tighten the lock screws 2 of the height adjustment again.
4. Lower the machine to the floor again.

Horizontal alignment of the stand:
1. Place a bubble level onto the working plate.
2. **Fig. 2:** Loosen the lock nuts of the table feet 1 .
3. Align the stand horizontally on all sides. To do so, turn the table feet to raise or lower them as required.
4. Tighten the lock nuts of the table feet again.

☞ **NOTICE - Transport lock!**

Before the machine is connected to the power supply systems, all transport locks must be removed.
- Cut off cable ties.
- Remove labels.

Fig. 1/2

Fig. 1

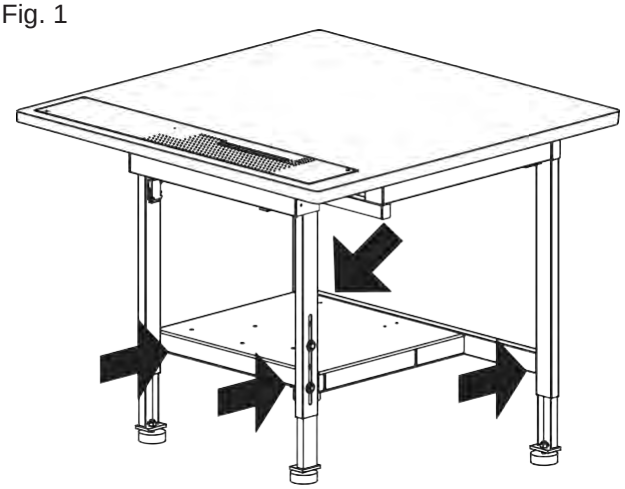

Fig. 2

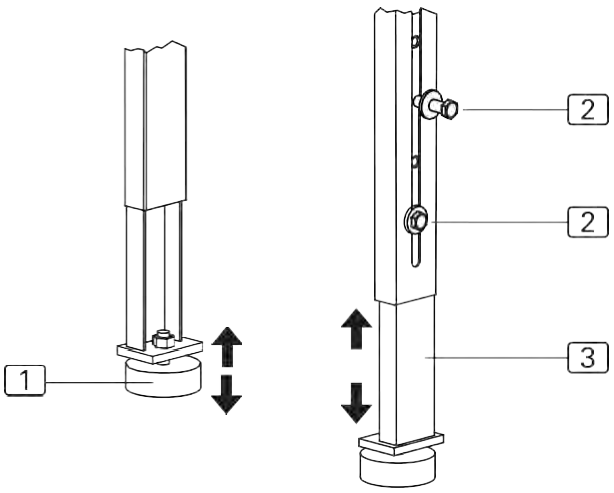

C.2 Requirements on storage and setup location

C.3.2 Compressed air

The compressed air connection has been pre-installed on the machine. It comprises the following components:

- Pressure reducer 6 with manometer 7 and water separator 5 ,
- Pressure hose with push-in plug 4 .

The pressure reducer is installed at the side mounting wall of the worktable.

Connect the machine to the compressed air supply:

1. Connect the compressed air hose connector to the on-site terminal unit.
2. Open the on-site compressed air source.
3. Set the pressure reducer to a machine operating pressure of 6 bar. To do so, rotate the pressure reducer 8 and read the value on the manometer 7 :
   - To increase the pressure, rotate clockwise,
   - To reduce the pressure, rotate counterclockwise.

Fig. 3

Setting pressures:
The operating pressures are set at the 3 pressure regulators:

- to increase the pressure, rotate the switch clockwise,
- to reduce the pressure, rotate the switch counterclockwise.

Function of the pressure regulators:

- Pneumatic spring 1 : approx 0.4 MPa, controls the traveling speed of the clamp to the stop.
- Downholder 2 : approx 0.2 MPa, controls the pressure of the pressure piece on the clamp.
- Clamp pressure 3 : 0.4 - 0.5 MPa, controls the pressure of the clamp on the sewing material.

Fig. 3

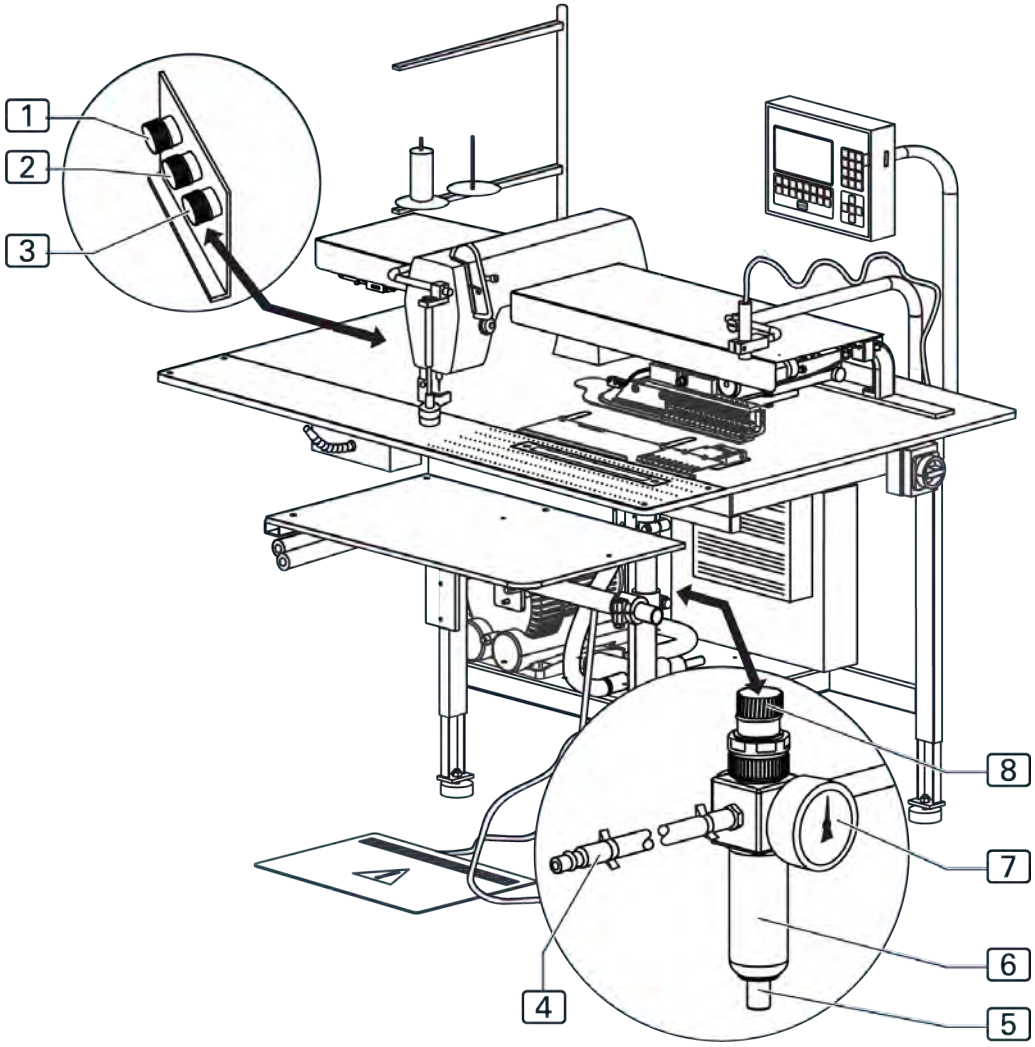

C.3 Commissioning

C.3.3 Vacuum supply connection

Connecting the machine to the vacuum supply:
No installation is required if the machine is equipped with the optional vacuum pump. The vacuum system is ready for operation.
If the machine was delivered without the vacuum pump, the on-site vacuum source must be connected to the vacuum valve of the machine. The vacuum valve is located on the lower storage surface of the worktable.

☞ **NOTICE - Required components!**

The following components must be provided on site:
- A vacuum hose with a minimum inner diameter of 1¼ " or, as required, an adapter or reducer for connecting the on-site vacuum hose to the sleeve (outer diameter 1¼ ") of the vacuum valve on the machine.
- A hose clamp with a minimum inner diameter of 1¼ ".

Fig. 4

1. Slip the on-site vacuum hose 4 onto the sleeve 2 of the vacuum valve 3 .
2. Make sure that the vacuum hose 1 leading to the tabletop has been attached correctly and securely.
3. Open the on-site vacuum source.

Fig. 4

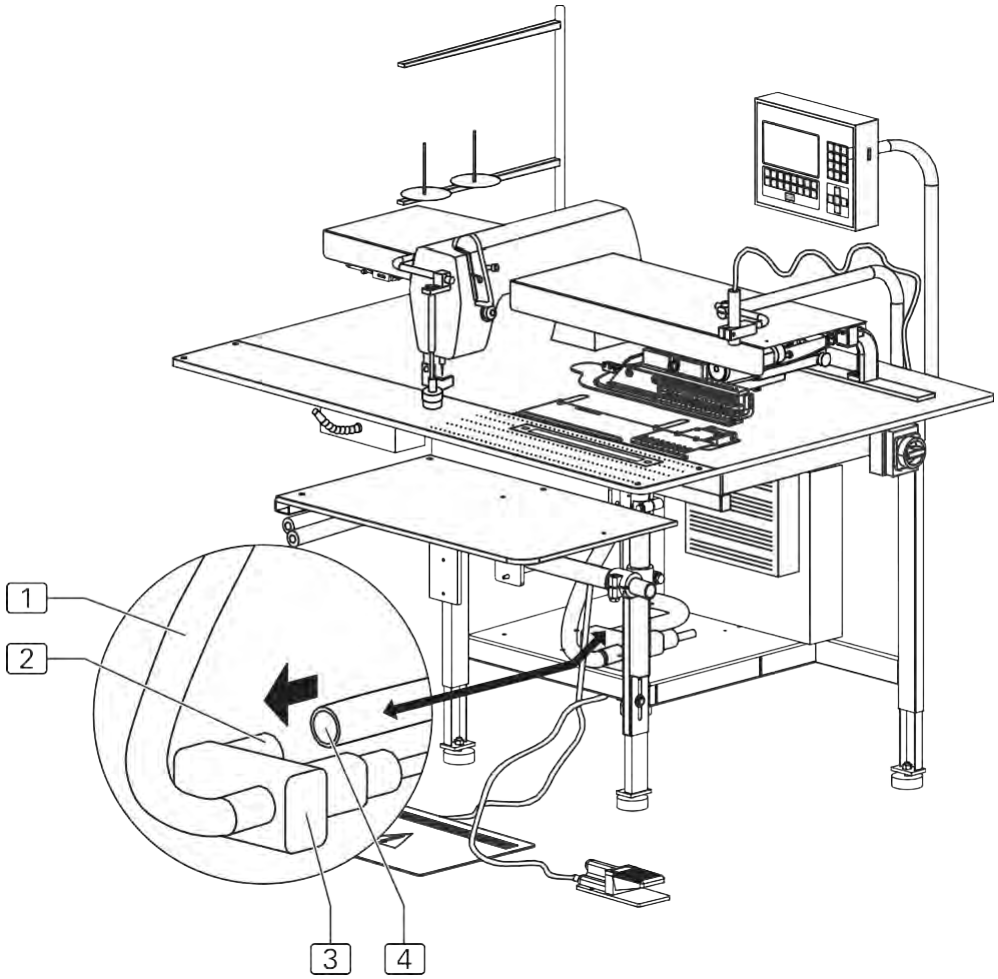

C.2 Requirements on storage and setup location

C.3.4 Power supply connection

The power cable and the power plug are pre-installed on the machine. The foot buttons for controlling the machine operation and the bundle clamp have also been assembled and are operational.

Connecting the machine to the power supply:

1. Place the foot buttons for machine operation and for the bundle clamp in the desired locations on the floor at the front side of the machine.
2. Establish the electrical connection.

WARNING - Electric shock:

Contact with current-carrying components may cause a lethal electric shock. Check plug and power cable before connecting the machine to the power supply system.

- **Do not use damaged plugs, sockets or cables to connect the machine to the power supply system!**
- **The machine is connected to a mains voltage of 230 V ±10 % at 50/60 Hz.**
- **Before connecting the machine to the power supply system, check to see if the ratings of the power supply system in the operating room correspond with the ratings on the type plate at the rear of the machine.**
- **If the ratings for voltage (V) and maximum current (A) do not match, the machine must not be connected.**
- **Insert the grounding plug into a properly grounded and fused power socket.**
- **Make sure that the power cable is not subject to tensile or pressure forces.**
- **Route the power supply cable in a way that ensures free access to and around the machine.**

NOTICE - Work on the electrical system!

Work on the electrical system of the machine may only be carried out by qualified and authorized specialists. Tampering with the machine without authorization will void the warranty.

C.3.5 Safety check

Before the machine is released for operation, all safety devices must be checked for their correct operation.

CAUTION - Risk of injury!

The safety devices protect the operating and service personnel while working on or with the machine.
If the safety devices are fully or partially inoperative, the machine must not be started up.

Performing a safety check:

1. Check to see if the cover above the clamp transport unit is correctly and safely installed.
2. Check to see if the finger protection at the sewing head covers the needle effectively.
2. Make sure that the guide laser is not directed into the view area of the machine operator.
3. The main switch also serves as an emergency stop switch. To check the function of this switch, turn the machine on, start a machine cycle and turn the machine off during the stitching-down process using the main switch. All operational movements of the clamp and of the sewing head must stop, and the program control must switch off.
4. Check the function of the Program Stop key. Start a machine cycle and press the key. All operational movements of the clamp and of the sewing head must stop.
5. Press the Program Stop key. The program control starts a reset, and the clamp must return to its initial position.

The machine is ready for operation.

C.4 Operation and decommissioning

C.4.1 Working with the machine

Factory settings:
The machine has a factory-programmed standard program (**M 01**) with four seams (**01, 02, 03, 04**) at different **stitch widths**.
This seam program is so powerful that it can be used for production.
It is furthermore perfectly suited for training operators and can be used as a template for programming customer-specific seam programs.
For details about the programming of seam programs, please refer to Section D of these operating instructions.

C.4.2 Decommissioning the machine

When the machine is to be shut down, it must be disconnected from all energy supply sources.

Disconnecting the machine from the power supply:
1. Turn the machine off using the main switch. Move the switch to the "0" position.
2. Remove the power plug from the socket and protect it from accidental reconnection.

Disconnecting the machine from the compressed air/ vacuum supply system:
1. Shut off the on-site compressed air / vacuum.
2. Remove the compressed air hose connector from the on-site terminal unit.

☞ **NOTICE - Dust-proof protection!**

If the machine is taken out of operation for an extended period of time, it should be covered with a plastic tarpaulin.

C.5 Maintenance

CAUTION - Risk of injury!

Contact with current-carrying components may cause a lethal electric shock.
If the machine is put in motion accidentally, persons in its direct vicinity may be caught by moving parts, which may cause injuries.
Prior to any service, cleaning or maintenance work, disconnect the machine from the power supply system!

- **Switch off the machine at the main switch.**
- **Remove the power plug from the socket and protect it from accidental reconnection.**
- **If the power supply is not required for repair or setup work, the machine must be disconnected from the power supply system.**

C.5.1 Inspection

The machine must be inspected annually. The inspection comprises the following items in particular:

- safety devices of the machine,
- good working order of the program control,
- correct function of inputs and outputs.

C.5.2 Cleaning

The machine must be cleaned after large production series, or at least once a day, whichever occurs first.

Cleaning machine surfaces:

1. Disconnect the machine from the power supply.
2. Remove fabric residues.
3. Using compressed air, blow off dust and thread residues at the sewing head, at the working plate, at the clamp and at the linear rail.
4. Wipe machine parts dry using a dry, clean cloth.

NOTICE - Plastic surfaces!

Some parts of the machine surfaces are made of plastic materials. Solvents may dissolve plastics and render them unusable.
Do not clean the machine surfaces, especially not the control panel, with cleaning agents that contain solvents.

C.5 Maintenance

C.5.3 Maintenance

The following maintenance tasks must be carried out at weekly intervals.

Lubricating the clamp rail:

1. Disconnect the machine from the power supply.
2. Wipe the clamp rail clean using a soft, oil-saturated cloth.
   The scope of delivery comprises 0.25 l of oil. When this oil is used up, you can order the special machine oil for maintenance from the manufacturer or supplier of the machine.

Emptying the water separator:

1. Disconnect the machine from the power supply.
2. Drain the water at the pressure reducer water separator.
   Have a water container ready and press and hold the button 1 on the collection tray of the pressure reducer until the water has been drained completely.

☞ **NOTICE - Sewing head!**

For information about the maintenance of the sewing head, please refer to the operating instructions of the sewing head.

Fig. 5

Fig. 5

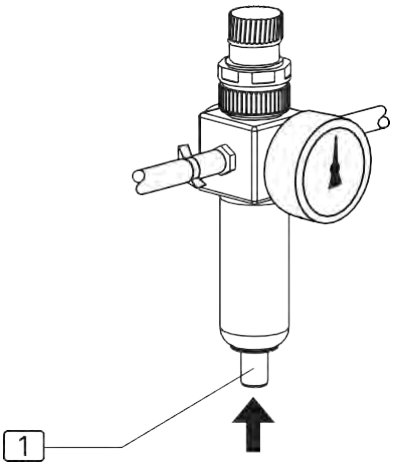

C.5 Maintenance

C.5.4 Repairs

Any repairs on the machine may only be carried out by:

- an authorized Technical Service,
- personnel who have been instructed on how to set up and maintain the machine in the context of a training course provided by the supplier or manufacturer.

Use only original spare parts for installing or replacing machine components.
Manufacturer and supplier cannot be held responsible for spare parts from third parties.

☞ **NOTICE - Programming instructions!**

Repairs require that machine components carry out their individual movements and that the machine movements be tested. These functions are controlled on level 1 of the service menu.
For the necessary instructions, please refer to the programming instructions in section D.

Disassembling/assembling the control panel:

1. Disconnect the machine from the power supply.
2. Unscrew the fastening screws 4 of the control panel holder 5 .
3. Remove the control panel 1 , position the replacement part and tighten it.
4. Install the seam programs: Insert the memory stick 3 into the port 2 (see Section D, Programming instructions).

Fig. 6

Fig. 6

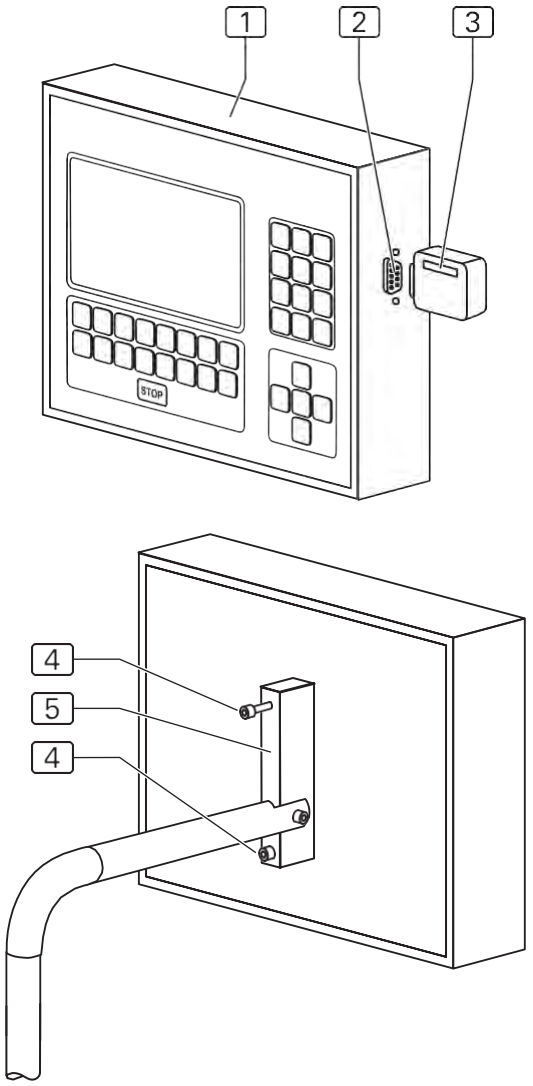

C.5 Maintenance

C.5.4 Repairs

Fig. 7/8

Replacing the toothed belt for clamp transport:

1. Disconnect the machine from the power supply.
2. **Fig. 8:** Remove the fastening screws 3 from the drive roller cover 2 and remove the cover.
3. Remove the cover AT from the slide roller. To do so, unscrew the two fastening screws AT.
4. Loosen the two lock screws 5 to release the tension of the toothed belt 8 .
5. Loosen the lock nuts 7 of the adjusting wheels 6 and rotate the two adjusting wheels backward.
6. Remove the toothed belt and open the connecting link 4 .
7. **Fig. 7:** Unscrew the two connecting screws 1 . Separate the upper part 2 from the lower part 4 of the connecting link.
8. Slide the clamp to the left until it reaches the stop position.
9. **Fig. 8:** Place the toothed belt on the idler 9 and fit it around the drive roller 1 and the slide roller c .
10. **Fig. 7:** Position the connecting link and screw it in place.

☞ **NOTICE - Aligning the connecting link!**

To prevent the connecting link from moving over the drive or guide rollers during clamp transport, the connecting link must be positioned at a distance of exactly 60 mm from the right end point of the clamp transport unit.

Fig. 7

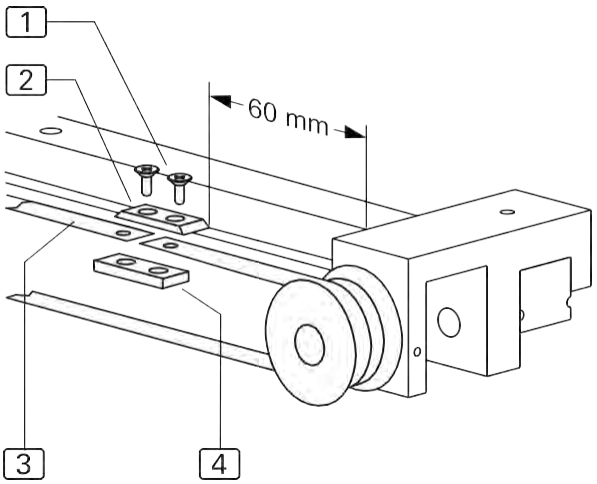

11. The ends of the toothed belt 3 are fitted with holes. Install the upper and lower part exactly over the holes of the toothed belt and connect the two parts and the toothed belt using the connecting screws.
12. **Fig. 8:** Tension the belt by tightening the two adjusting wheels 6 until the toothed belt can be depressed approx. 10 mm with noticeable counterpressure at the middle of the linear rail. Tighten the lock nuts 7 and the lock screws 5
13. Install the two covers 2 and AK.

Fig. 8

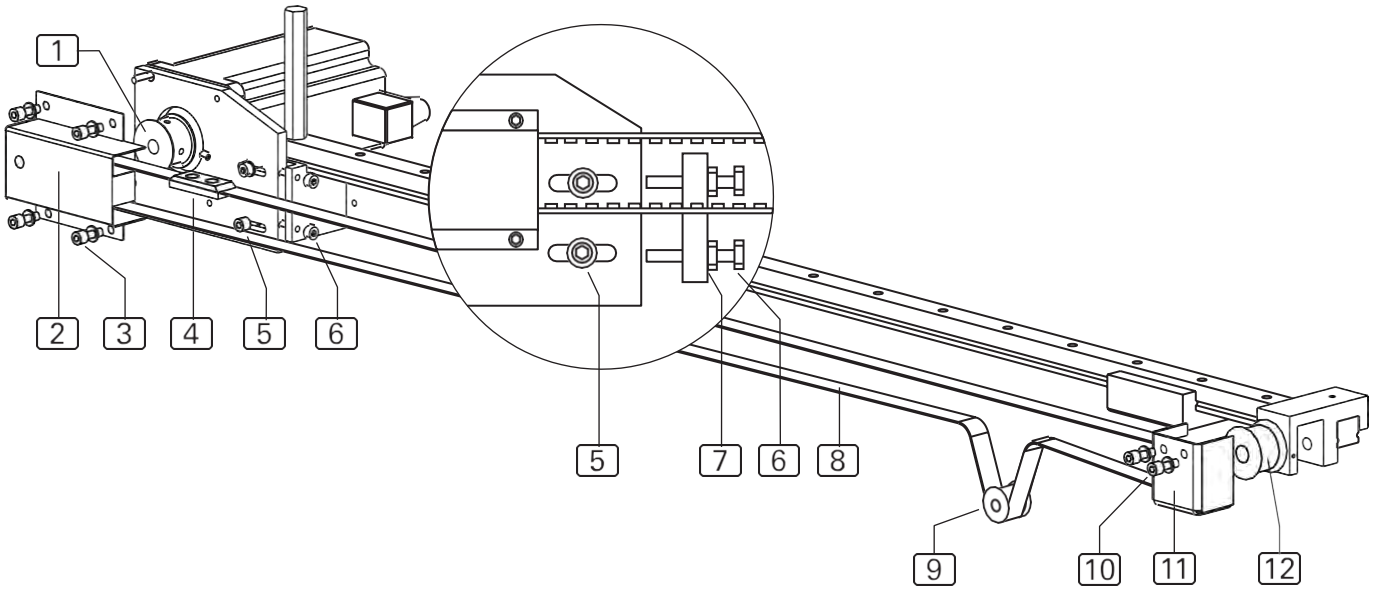

C.5 Maintenance

C.5.4 Repairs

Removing/assembling switch cam and light barrier:
To allow for the activation of the reversing device of the sewing drive, a switch cam 5 must be installed correctly relative to a light barrier 4 on the lower shaft.

Light barrier removal:
1. Disconnect the machine from the power supply.
2. Loosen the screws of the connecting cable plug on the control 6 and pull it out of the socket 7 of the control 6 . The control 6 has been assembled below the tabletop.
3. Disconnect the plug 2 at the light barrier 4 .
4. Loosen the screw 3 and remove the light barrier 4 .
5. If the cable is supposed to be changed, the cable ties must be removed. It will then be possible to take the cable out.

Light barrier assembly:
1. Fit the light barrier 4 on the holder and tighten the screw 3 .
2. Connect the plug 2 at the light barrier 4 .
3. On the control 6 , insert the connecting cable plug into the socket 7 and tighten the screws.
4. Check the cable and tighten it using the cable ties.
5. Connect the machine to the power supply.

Switch cam adjustment:
1. Switch off the machine.
2. Turn the needle bar 8 to the bottom dead center using the handwheel 9 and use the locking peg to fix it in place in setting position 6.
3. Slightly loosen the fastening screws 1 of the switch cam 5 , ensuring that the switch cam 5 can be twisted on the lower shaft. The switch cam 5 must not shift under its own weight.
4. Position the switch cam 5 in the center AT and immersed halfway AKin the light barrier 4 .
5. Tighten the fastening screws 1 of the switch cam 5 .

Setting the global parameters:

- For global parameter 39 (thread lever reversing angle), set the value 25 INC (see Section D, Programming instructions).

Fig. 9

Fig. 9

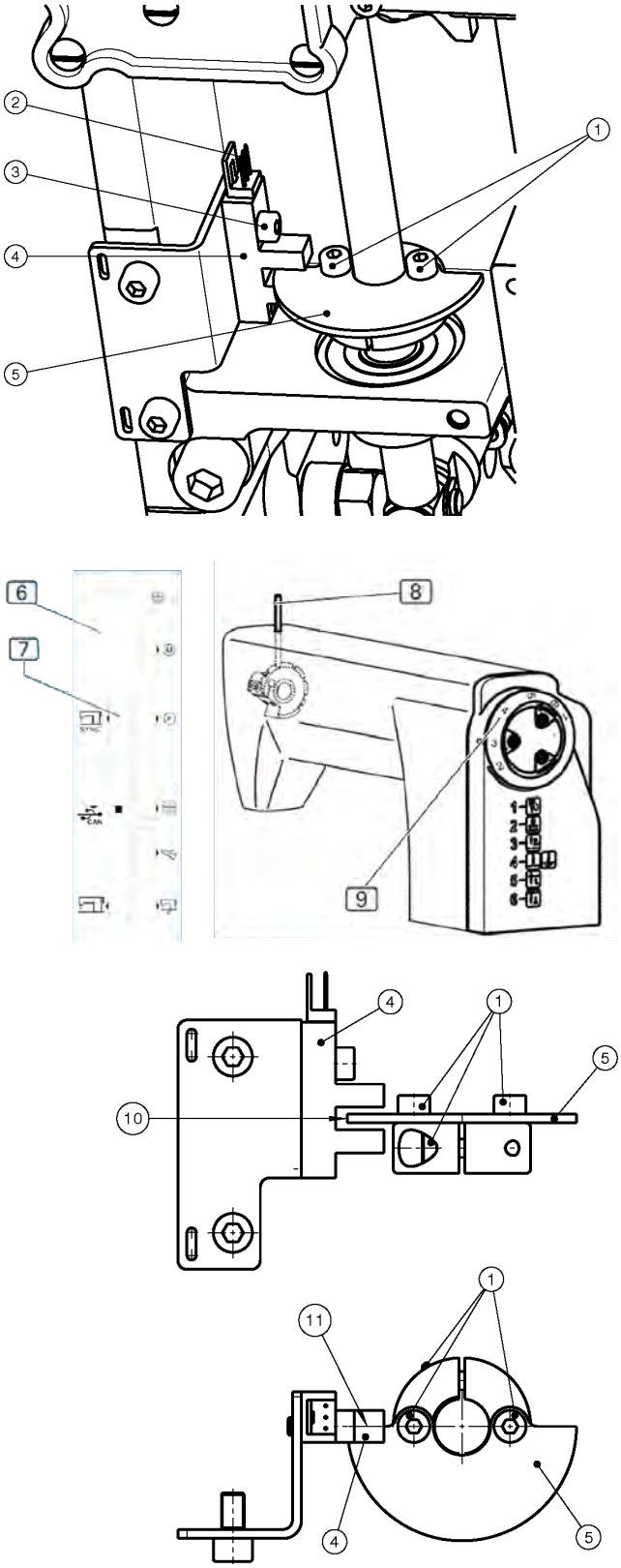

C.5 Maintenance

C.5.4 Repairs

Assembling/removing the clamp rail:
The clamp rail must be replaced if the protective lining on the bottom side of the rail is worn out.

Clamp rail removal:
1. Lift the main clamp.
2. Loosen and slightly unscrew the fastening screw 2 .
3. Pull the clamp rail 1 down to remove it.

Clamp rail assembly:
1. Insert the clamp rail1 into the fixture 3 and push it up until it reaches the stop. Make sure the clamp rail is positioned evenly in the fixture.
2. Tighten the fastening screw 2 .

Fig. 10

Fig. 10

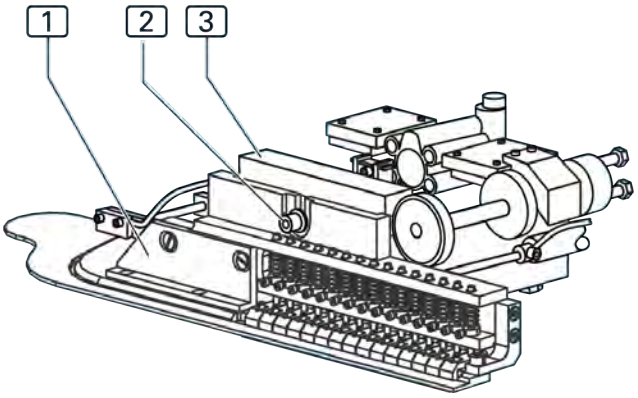

C.5 Maintenance

C.5.5 Setting up the machine

NOTICE - Activating inputs /outputs!

To allow for the testing of machine movements or interval operation, the individual stages of movement can be activated with the inputs/outputs of the machine control (see programming instructions, section D.4.3, service menu level 1).

Usually, the setup of the machine is controlled by parameter values of the seam programs (special parameters) and the parameter values of the machine control (global parameters). The following additional mechanical modifications may be required to ensure that the seams can be completed correctly with the set parameter values.

Adjusting the laser marking line:
The position of the guide laser can be adjusted height-wise as well as vertically and horizontally.

Adjusting the height of the holder:
1. Loosen the lock screw 4 on the rear of the worktable.
2. Position the holder 3 at the desired height.
3. Tighten the lock screw 4 again.

Vertical adjustment for tilting the holder into the desired position:
1. Loosen the lock screw 2 .
2. Swivel the angular bracket 6 to the desired position.
3. Tighten the lock screw 2 again.

Horizontal adjustment for achieving a 90° angle to the stop rail:
1. Loosen the lock screw 1 .
2. Rotate the laser light (5 to the desired position.
3. Tighten the lock screw 1 again.

Fig. 11

Fig. 11

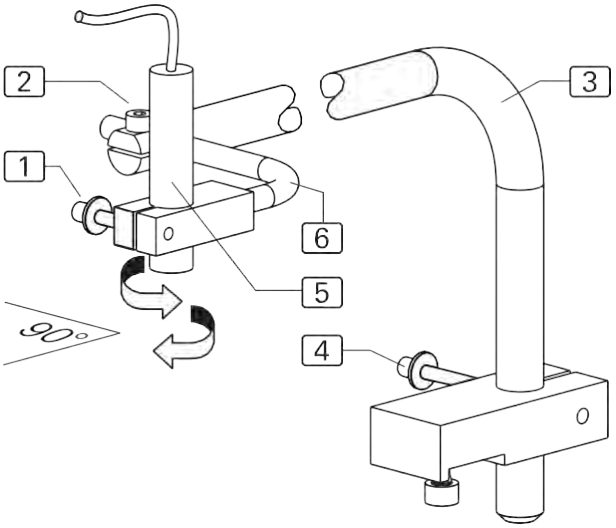

C.5 Maintenance

C.5.5 Setting up the machine

Following all work steps on the main clamp, the clamping pressure and the alignment of the clamp rail relative to the needle must be checked.

Adjusting the clamping pressure of the clamp rail:

1. Check to see if the main clamp exerts pressure on the sewing piece evenly along the entire length of the rail. To do so, line up a piece of fabric at the insertion position and lower the main clamp.
2. Check the clamping pressure by trying to pull the sewing piece out of the clamp at several locations along the clamp rail.
3. **Fig. 12:** If the clamping pressure is irregular or insufficient, remove the clamp rail 1 and adjust the pressure using the two adjustment screws 2 on the inner side of the clamp rail. Tightening the adjustment screws will increase the pressure of the clamp rail on the working plate as the overall height **H** of the main clamp increases.
4. Keep repeating the adjustment and rechecking with the main clamp lowered until the clamping pressure is distributed evenly along the entire length of the clamp rail.

Adjusting the position of the clamp rail:

1. Lower the main clamp.
2. Depressurize the compressed air system of the machine. To do so, disconnect the compressed air hose of the machine from the on-site compressed air supply system.
3. Move the main clamp manually under the sewing head and use the manual drive to lower the needle into the groove on the clamp rail.
4. **Fig. 13:** Check to see if the needle 5 is centered in the groove4 of the clamp rail 1 . If not, change the orientation of the clamp rail to the needle.
5. Loosen the screw 3 at the bottom of the main clamp, reposition the clamp rail, and tighten the screw again.

Adjusting the parallel orientation of the clamp rail:

1. Check to see if the sewing head needle is positioned dead center in the groove along the entire length of the rail. To do so, move the main clamp under the sewing head.
2. **Fig. 13:** If the position is not parallel, loosen the eight clamp fastening screws 2 of the clamp bracket and swivel the clamp rail to the parallel position.
3. Tighten the fastening screws of the clamp bracket and recheck the parallel orientation of the clamp rail.

Fig. 12/13

Fig. 12

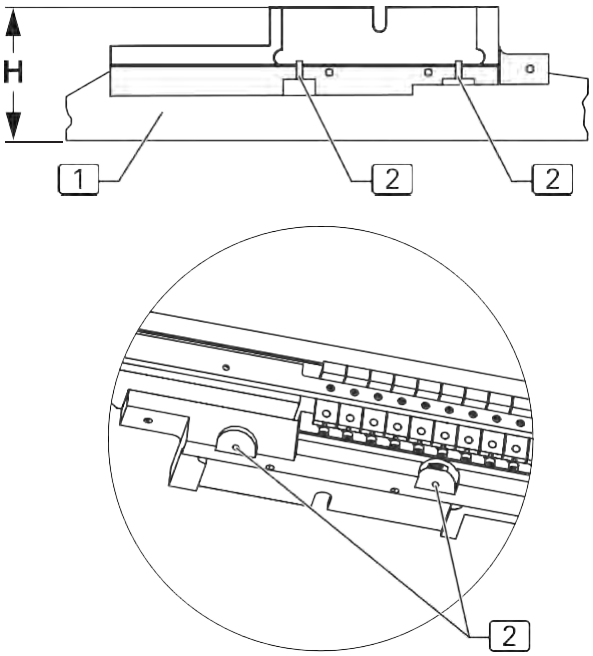

Fig. 13

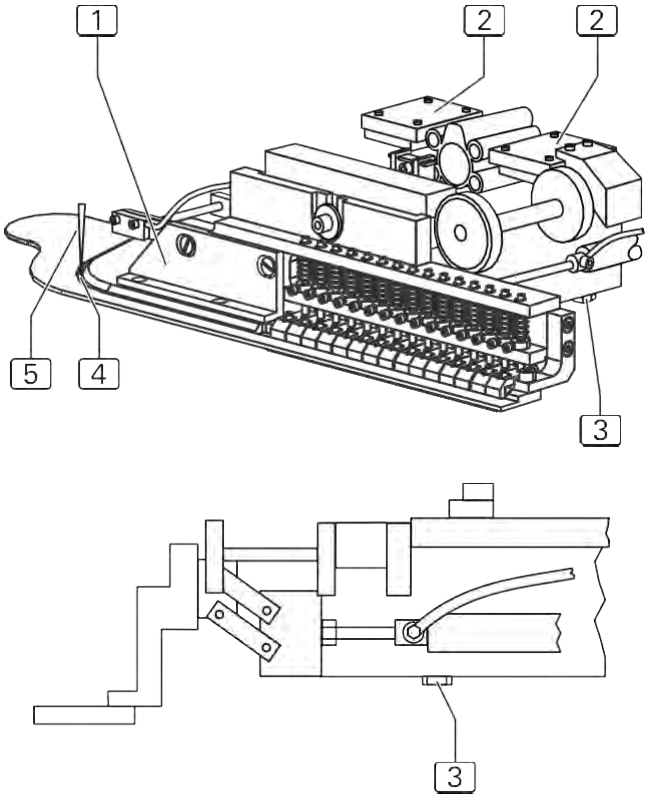

C.5 Maintenance

C.5.5 Setting up the machine

Changing the stitch width:
The correct stitch width setting is determined by trial and error. It can be set to any value between 28 and 46.4 mm. To do so, adjust the stop 1 at the right side of the main clamp.

1. Disconnect the machine from the power supply.
2. Using the adjusting wheel 2 , select the number of the seam for which you wish to adjust the width.
3. Line up a ruler 9 or a measuring tape with the stop 6 .

Lower the main clamp.

4. Set the stop screw 3 of the selected seam to the stitch width. To do so, loosen the lock nut4 and turn the stop screw to the desired length.
   Set the stitch width so that the distance between the stop 6 and the needle 7 is measured from the center of the milling8 in the clamp rail 5 .
5. Tighten the lock nut 4 again and recheck the stitch width at the sewing piece.

Fig. 14

Fig. 14

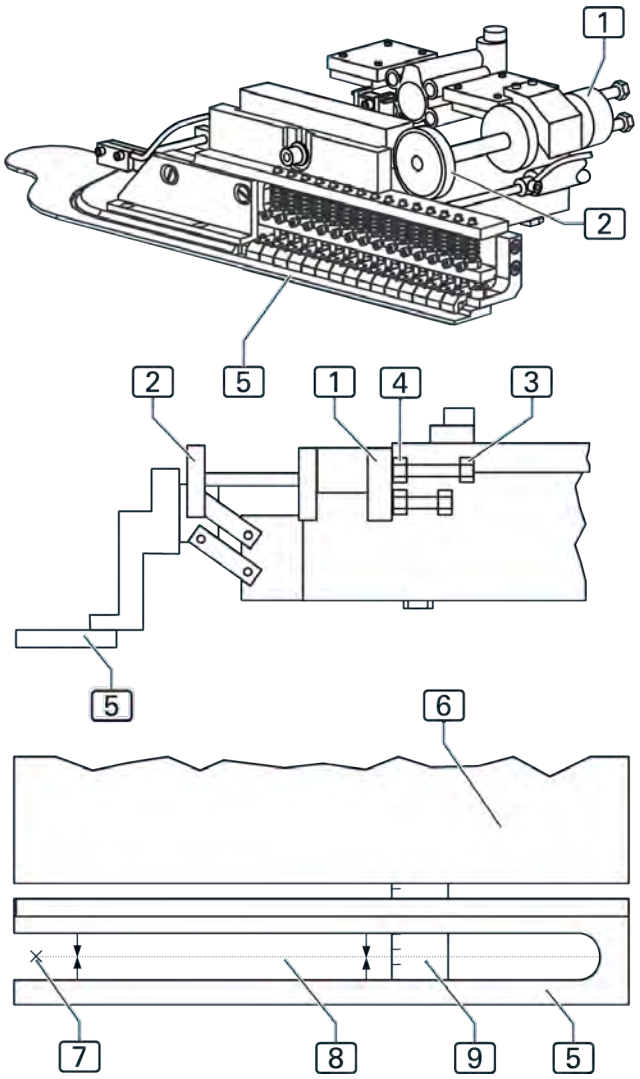

C.5 Maintenance

C.5.5 Setting up the machine

Setting the synchronization of the clamp rail and the needle:
The synchronization of the clamp rail and the needle is determined by three switching operations:

- When the main clamp 5 approaches the control cam 4 , the driver roller 3 repositions the switching flag 2 during this movement.
- The switching flag activates the initiator 1 which reduces the main clamp traveling speed to the preset value.
- If the switching flag has been completely shifted against the control cam, the initiator 7 is activated, starting the sewing process.

Settings procedure:

1. Lower the main clamp.
2. Depressurize the compressed air system of the machine. To do so, disconnect the compressed air hose of the machine from the on-site compressed air supply system.
3. Use your hand to push the main clamp under the sewing head.
4. Check the contact point of the initiator1 . While the switching flag 2 is not in contact with the driver 3 , the initiator must not be in contact (indicator must not be lit). If the initiator has permanent contact, loosen the initiator lock nut and unscrew the initiator to the switch-off point. After that, tighten the lock nut again.
5. Push the switching flag 2 up to the control cam 4 . When the switching flag and the control cam are flush, the initiator 7 must have contact (indicator lights up).
6. If the initiator does not have contact when the switching flag2 is in this position or if the initiator is activated when the switching flag is in a different position, change the position of the slide 6 .
7. Loosen the two lock screws 8 of the slide and move the slide with the initiator to the exact contact point.
8. Tighten the two lock screws 8 again.

Fig. 15

Fig. 15

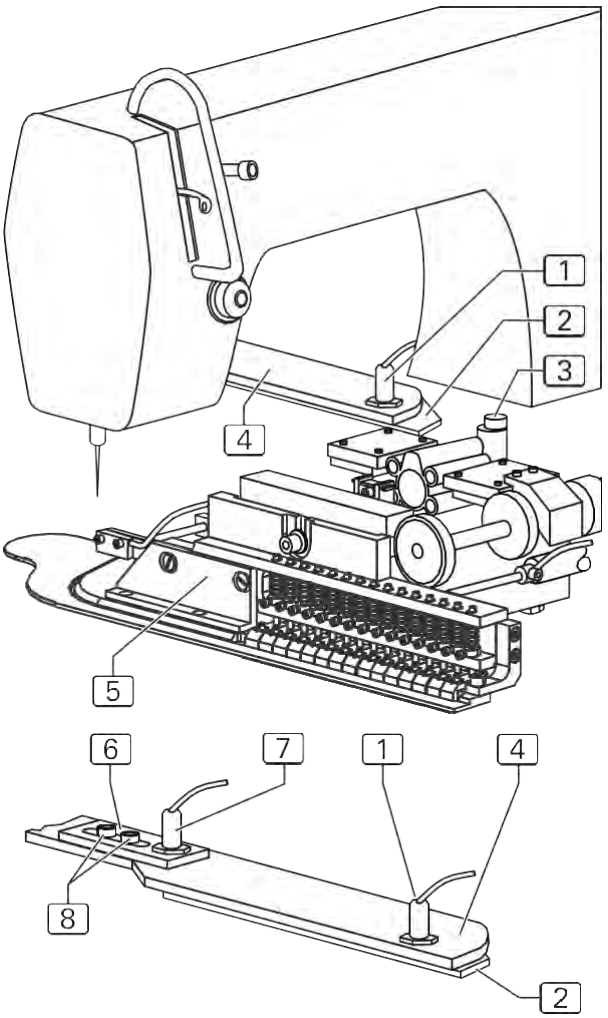

C.5 Maintenance

C.5.5 Setting up the machine

Adjusting the main clamp photocell for seam beginning at the 1931-7 sewing machine

The side movement of the main clamp to the front is controlled by the position of the photocell 1 above the reflective stripe 3 of the stop rail.

The red luminous spot of the photocell must be directed to the center of the reflective stripe. This position is set by a stop 4 on the left side of the main clamp.

1. Move the main clamp sideways to the front and check the position of luminous spot.
2. To reposition the stop, loosen the threaded pin of the stop 4 .
3. Move the set collar along the guide rod 2 and tighten the threaded pin again.
4. Check the movement of the main clamp.

Fig. 16

Fig. 16

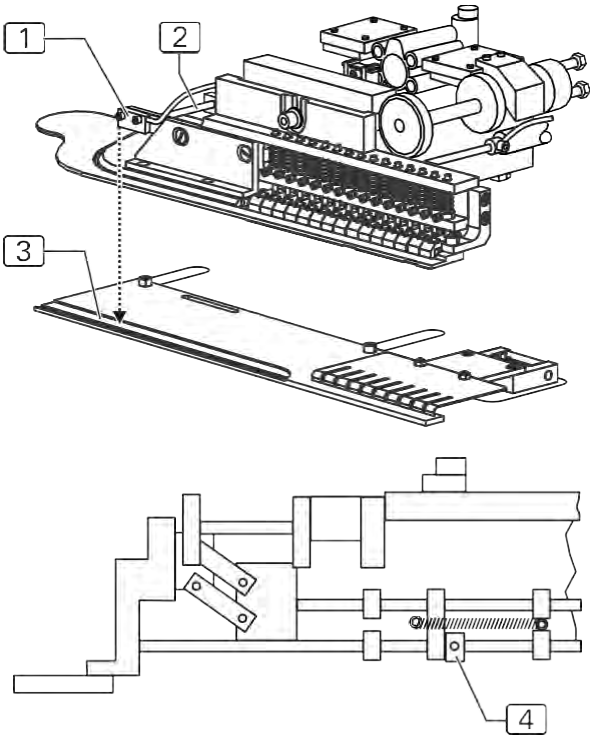

C.5 Maintenance

C.5.5 Setting up the machine

Adjusting the safety initiator
The safety initiator 6 keeps the sewing head from sewing beyond the groove2 of the clamp rail 3 and prevents the needle from being damaged.

1. Lower the main clamp.
2. Depressurize the compressed air system of the machine. To do so, disconnect the compressed air hose of the machine from the on-site compressed air supply system.
3. Use your hand to push the main clamp under the sewing head.
4. Lower the needle using the handwheel.
5. Position the main clamp so that distance **E** between needle and end of clamp rail groove is 5 mm.
6. Move the safety initiator (S20) 6 to the correct position in the slotted hole 1 of the holding rail.
7. Loosen the lock nut and move the safety initiator until the LED 5 of the safety initiator lights up as soon as it is shaded by the holder 4 of the main clamp.
   The switching distance **S** must be 1 mm.
8. Secure the position and tighten the lock nut again.

Fig. 17

Fig. 17

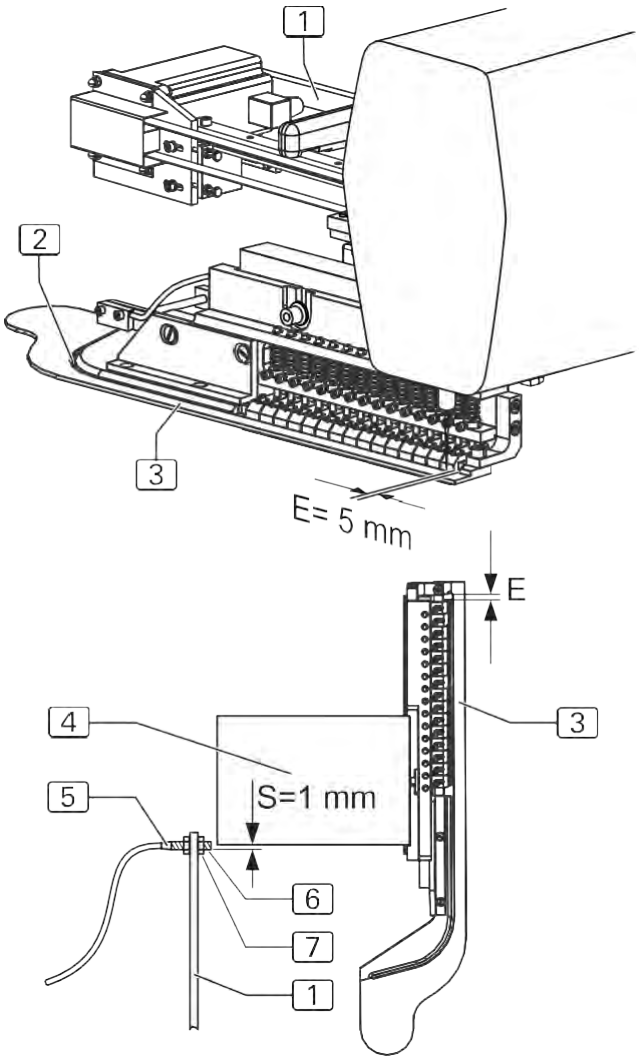

C.5 Maintenance

C.5.5 Setting up the machine

Adjusting the stepper motor PCB
The PCB for controlling the stepper motors is installed in the switch box.

NOTICE - Machine cycle!

To prevent moving machine parts from colliding with each other or with other components when the machine is switched on again, move the machine manually to its initial position before replacing the PCB.

1. Depressurize the compressed air system of the machine. To do so, disconnect the compressed air hose of the machine from the on-site compressed air supply system.
2. Slide the machine parts to their initial position.

CAUTION - Damage to electrical components!

The PCB switches must not be tampered with while voltage is applied to the machine.
Otherwise, the electrical components concerned may be damaged or become unusable!
Disconnect the machine from the power supply system and protect it against accidental reconnection.

Adjusting switches on the PCB:

1. Adjust current lowering using DIP switch 1 (current lowering off).
2. Adjust the number of steps using DIP switches 2 , 3 and 4 (2000 micro steps per revolution).
3. Adjust the motor phase current. Turn the rotary switch 5 to position D (5.25 A rms).
4. Switch on the supply voltage. When the PCB is adjusted correctly, the stand-by LED 8 is illuminated, and the stand-by relay is energized.

Fig. 18

Fig. 18

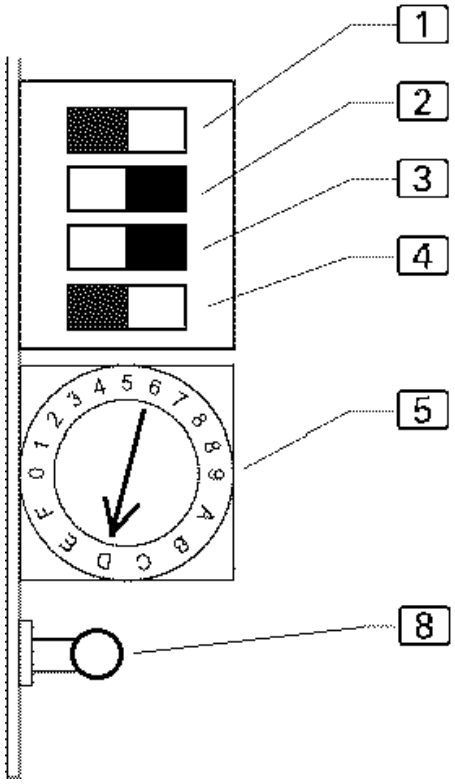

C.5 Maintenance

C.5.5 Setting up the machine

Checking the remaining thread monitor
The remaining thread monitor is checked using a photocell. If the messages on the display do not match the filling state of the bobbin, the photocell sensitivity must be checked.

1. Fill the bobbin to half its capacity until the inspection glasses 2 of the upper chamber 1 are covered.
2. Insert the bobbin and stitch down until the display shows: BOBBIN: 003 m.
   Keep sewing until the display shows the message: BOBBIN EMPTY
3. Remove the bobbin, unwind the remaining thread and measure the remaining length. The remaining length of thread should be 0.5 m.

Adjusting the photocell:
- If the thread on the bobbin is sewn off beyond the remaining length of 0.5 m without the message BOBBIN EMPTY being displayed, the photocell sensitivity must be increased:
  - Rotate the potentiometer at the photocell clockwise.

If the message BOBBIN EMPTY is displayed even though the bobbin contains more than 0.5 m of thread, the photocell sensitivity must be reduced:
  - Rotate the potentiometer at the photocell counterclockwise

Fig. 19

Fig. 19

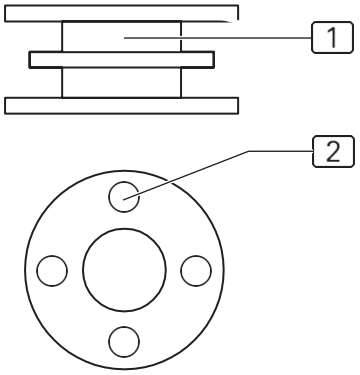

C.6 Troubleshooting

Error 01: “Seam program empty“	Current seam program empty; possibly, distances and routes have not been input or the entire program was erased	Insert program values manually, copy from other program or retrieve from ROM (parameter INIT)
Error 02: “Seam not enabled“	Current seam program not activated; number appears black on white	Press <ENT> button to switch on program
Error 04: “Clamp in wrong position”	Actual value pulses from clamp motor do not correspond to target value	Reduce current for clamp motor to MAX clamping pressure
Error 05: “I/O communication error“	Error transmitted between control and I/O module	Check connecting cable; if not OK, replace control and/or I/O module
Error 06: “Step pulses not valid”	Clamp slide not positioned correctly	Check sensor connection to clamp motor; check connecting cable between adapter board 9020020 and I/O module 9020013; replace adapter board 9020020
Error 07: “No step pulses from clamp motor”	No step pulses from clamp motor. If the clamp motor moved slightly, the step pulses could not be processed properly. If the motor did not move, the problem may be caused by the control unit or the clamp motor power unit	Check connection to clamp motor; replace clamp motor; replace adapter board 9020020; check condition of LEDs at power board (Berger); if required, check Berger motor; check connection to clamp motor (plug); check connection between 9020020 and power unit (plug); replace adapter board 9020020
Error 08: “Main clamp at stop”	Limit switch ES04 switched during clamp movement even though clamp should have been distant still	Check distance counter using test program (steps); if counter is faulty, replace clamp motor or adapter board 9020020; if counter is OK, check switch 04
Error 09: “Clamp can not leave the switch“	Clamp slide moves to limit switch during initialization but does not return (direction not reversed)	Using test program “Clamp motor actuation”, enter a slow speed and reverse direction using the arrow buttons; if motor does not reverse direction, check: connection between 9020020 and power unit (plug); Berger power unit; if motor reverses direction, check limit switch ES04
Error 12: “Safety photocell not lighted”	No reflection for photocell FZ 20 (safety)	Replace reflective film; check photocell (input)
Error 13: “Clamp position error“	Excessive difference between nominal position (stepper motor default) and actual position (pulse from setpoint device) of clamp slide; clamp slide probably blocked	remove blocked component; check clamp slide for easy movement; check motor pinion (may be loose on shaft); tension transport belt

C.6 Troubleshooting

Error 14: “Insertion/sewing length error”	Seam length exceeds maximum possible seam distance, excessive insertion distance	Program seam distance / insertion distance correctly
Error 15: “Switch for curve start”	ES12 (curve start slope) does not switch or switches too late	Check ES12 (input); check mechanical components for easy movement
Error 16: “Folder not left“	ES08 (folder at left stop) does not switch or switches too late	Check ES08 (input); check mechanical components for easy movement
Error 21: “Clamp not sideways“	ES05 (clamp movement sideways) does not switch or switches too late	Check ES05 (input); check mechanical components for easy movement
Error 22: “Clamp/curve wrong“	Clamp used does not correspond to the curve used	Clamp safety switch (ES15/16) not identical to curve safety switch (ES13/14)
Error 29: “No pulses from sewing motor“	No pulses from sewing motor after sewing process starts (sewing motor does not run)	Check sewing motor and synchronizer; check connection between I/O module 9020013 and sewing motor; read condition of two upper LEDs at 9020013: left LED lights up briefly when needle is up; right LED shows synchronization pulses (512 pulses/rotation); if none of the two LEDs illuminates when handwheel is moved, check sewing motor power supply; replace sewing motor if required; if LEDs are OK and the motor does not run before the error message, check the connection between 9020020 and sewing motor; replace 9020020 if required; if the motor makes some stitches before the error message, check the connection between control and I/O module; replace components as required
Error 30: “Sewing motor too fast“	During thread cutting, sewing motor did not reach cutting speed within error period	Replace sewing motor or synchronizer
Error 32: “Thread cutting position does not come“	During thread cutting, sewing motor did not reach the cutting position	Input slower cutting speed and earlier cutting position; replace sewing motor or synchronizer
Error 33: “Sewing motor does not stop“	After thread cutting, sewing motor does not stop within error period	Input slower cutting speed and earlier cutting position; replace sewing motor or synchronizer
Error 34: “Needle not up“	Needle not in upper rest position; when the error message is issued, the control attempts once more to move the needle to the upper position	Check sewing motor and synchronizer; check connection between 9020013 and sewing motor; read condition of two upper LEDs at 9020013; if no LED illuminates when handwheel is rotated, check sewing motor power supply; replace sewing motor if required; if LEDs are OK, check connection between 9020020 and sewing motor; 9020020 if required
Error 35: “Thread breaking”	Thread monitor detects thread breaking	
Error 37: “Bobbin thread only rest“	The photocell at the bobbin capsule is illuminated; bobbin empty	If bobbin is not empty, the photocell is set too sensitive and needs to be adjusted

C.6 Troubleshooting

Error 41: “No part”	Photocell FZ21 remains illuminated during insertion	Adjust photocell sensitivity; input test 21
Error 42: “Photocell not lighted“	Photocell FZ21 does not detect seam end	Seam distance too long; adjust photocell sensitivity; input test 21
Error 43: “Photocell lighted too early“	Photocell FZ21 detects intermittent reflection during insertion	Adjust photocell sensitivity; input test 21
Errors 45 ... 48: “I/O DAC, ULN, 485, RES”	Internal hardware error during data transmission to adapter board 9020020	Replace 9020020

C.7 Technical data

Power supply

Mains voltage	230 V ±10 %, 50/60 Hz
Electrical connection	(1, N, PE) AC
Power consumption	1.3 kW
Fusing	16 A

Dimensions of the machine

Width x depth x height in mm	1250 x 1050 x 1640

Table height

Adjustable height in mm	790 - 1240

Weight

Total weight	approx. 190 kg

Compressed air

Operating pressure	6 bar
Quality	oil-free
Air consumption	16 NL

Vacuum

Suction power	at least 130 m³/h

Section D Programming instructions

Section D Programming instructions

Table of Contents

D.1 Control panel

D.1.1 Display and button functions

1 Display
During machine operation, the display shows the values of the selected seam program. If menus are activated, the menu symbol or the corresponding parameters of the function are displayed.

2 Numeric keypad
All variable number values are entered using the numeric keypad.
The desired seam programs are called up using the M key. The P key is used to request submenus, confirm input and exit the programming mode.

3 Slot for memory stick
The memory stick is the storage medium for backup copies of all program control data. Programs can be copied to and stored on the memory stick and loaded into the machine control if required.

4 All arrow keys
Pressing the “Up” and “Down” arrow keys will move the cursor one line up or down in the selected menu.
Pressing the “Right” or “Left” arrow key will either mark the desired parameter or, if the parameter list comprises several pages, browse forward or backward.

5 Symbol bar
The symbol bar indicates the menus that can be called up using the function keys 7 directly from the start level.
For all other menus, the corresponding symbols are shown on the control panel display.

6 Program Stop key
If the key is pressed during the machine cycle, all machine movements and the sewing process are stopped.

Fig. 1

Fig. 1

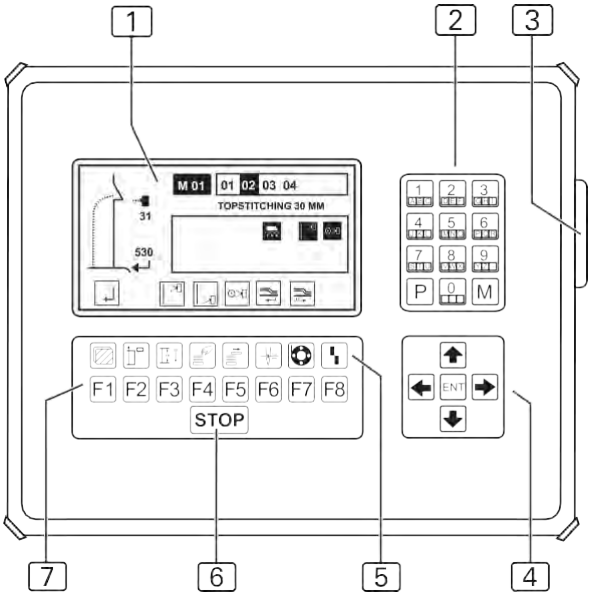

7 Function keys
The function keys are used to call up the menus on the selected level for setting or changing machine functions.
Two function keys have an identical function in all selectable menus.
To move to the previous level or to the start level and to move to the next level:

Press key F1 or F8

D.2 Basic programming principles

D.2.1 Layout of the program control

The program control is controlled using four different kinds of menus:
1. System menu,
2. Service menu,
3. Global Parameters menu,
4. Special Parameters menu.

System menu
The system menu is used to perform all settings for the program control operating system and for managing the seam programs:
- Copying factory settings to the program control,
- Saving programmed seam programs to the memory stick storage medium,
- Copying and renaming seam programs,
- Copying seam programs from the memory stick to the program control.

Service menu
The service menu is used to directly call up service functions. These functions support machine setup or other work steps required during machine operation, e.g. resetting the day counter or winding the hook thread.

GP menu
This menu is used exclusively for setting the global parameters, i.e. parameters that control the basic functions of the machine. Changing global parameters will result in changes to the seams of all stored seam programs (e.g. time for blowing off a finished sewing piece using compressed air).

SP menu
Special parameters are settings that refer only to one particular seam of a seam program. Changing a special parameter will affect only the currently selected seam for which a setting is made (e.g. stitch length of a seam).
The Special Parameters menu consists of several submenus.
Special parameters can be functions that may be enabled or disabled or parameter values that are set on lists.

Seam program
A seam program controls the entire machine cycle during production:
- transport of the sewing piece to the sewing head,
- stitching down a seam and
- ejection of the sewing piece.

A seam program is determined by two different kinds of values:
- Global parameters,
- Special parameters.

Seam programs can be copied or renamed.

Seam number
Each seam program can be executed with up to six seams of different stitch widths. The seams are assigned to the seam program by seam numbers (01, 02, ... 06).

Combination of seam program with seam
A seam program can be combined with one seam, with several seams or with all four seams at the same time. If a seam program with several seam numbers is called up, the seams are processed one at a time in the order of the seam numbers from left to right.
The order of the seams is freely selectable.

Memory
Seam programs are stored in the memory (**M**).
The program control memory can contain up to 50 seam programs (**M 01 - M 50**) with up to six seams (**01, 02, ... 06**) each. All seam programs stored in the memory can be copied to and stored on the memory stick as backup copies.

It is possible to call up to 99 seam numbers.

Creating seam programs
It is generally possible to create entirely new seam programs; however, it is easier to:
- copy a factory-programmed seam program to an unused location in the memory and to modify this program,
- copy an already programmed seam program to an unused location in the memory and adjust the program.

D.2 Basic programming principles

D.2.1 Layout of the program control

Combination of seam number with adjusting wheel
Fig. 02: The **adjusting wheel** 1 of the clamp must be set to the seam number of the seam you wish to sew first. This is the seam number on the left in the line of the seam numbers shown.

Factory settings
The machine has a factory-programmed standard program (**M 01**) with four seams (**01, 02, 03, 04**) at different **stitch widths**.
Tab. 01: The **numerals of the adjusting wheel** have been assigned to the seam numbers.

Access to menus
The following menus are freely accessible:
- Service menu
- Global Parameters menu
- Special Parameters menu

Except for three submenu pages, the entire system menu is controlled by access privileges. These privileges protect the system menu from unauthorized access. Data cannot be entered and the system menu cannot be modified unless the service code is entered. This code is contained in the documentation delivered with the machine.

Structure of the menu levels
The program control is divided into 6 menu levels - the start level and level 1 to level 5.
The **system menu** is called up from the start level. The remaining operator prompting is achieved with plain text in the submenus.
The service functions of the **service menu** are called up via direct access from the start level or from level 1.
The **Global Parameters menu** is called up from level 1, while the parameters pertaining to the menu are selected and changed on a list.
The **Special Parameters menu** is requested from level 1 and is edited on 4 other levels (level 2 - level 5) and in the pertaining parameter lists.

CAUTION - Damage to the machine!

Some of the menu entries start machine units or a machine cycle.
This may damage machine components if the machine is not ready for operation.
Do not enter data unless the machine is ready for operation.

Fig. 2

Fig. 2

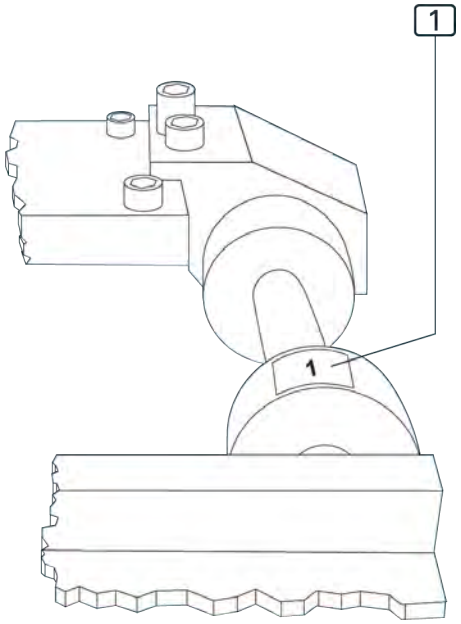

Assignment of adjusting wheel seam number		
Adjusting wheel	**Seam number**	**Stitch width**
1	01	30 mm
2	02	32 mm
3	03	35 mm
4	04	37 mm

D.2 Basic programming principles

D.2.2 Overview of the program levels

Fig. 3

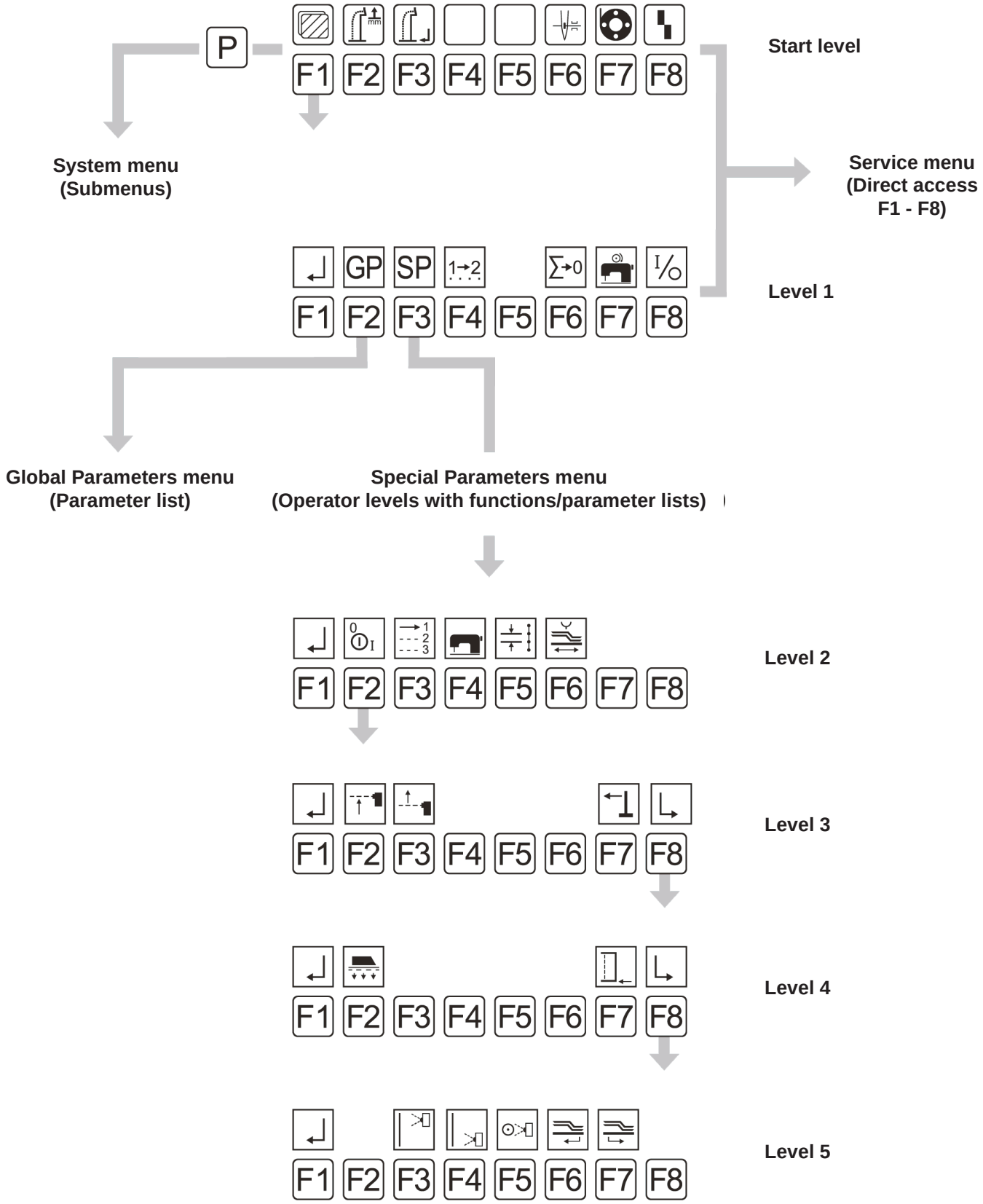

D.3 Programming

D.3.1 System menu

The system menu is divided into several submenus. The submenus themselves are divided into access-protected and open submenus. Access is protected by the **service code**.

Open submenus
Open submenus are freely accessible from the start level:
- Enter the service code
- View the total piece counter

Access-protected submenus
Access-protected submenus can only be opened after the service code has been entered:
- Eprom seam parameters
- Copy seam numbers
- Delete seam
- Enter seam name
- Copy seam program to memory stick
- Download seam program from memory stick
- Copy variables (global parameters/special parameters) to memory stick
- Download variables (global parameters/special parameters) from memory stick
- Run clamp motor in permanent test
- Test thread trimmer

☞ **NOTICE - System menu control!**

The submenus of the system menu are requested and exited using the same keys. Exceptions from this rule are indicated by plain text in the corresponding menu.

To request the system menu from the start level:

- Press the P key

To confirm your input and exit the system menu:

- Press the P key

☞ **NOTICE - Submenu levels!**

All input for the system menu must be started from submenu level 1.

To switch to submenu level 1:

- Press the ← key

The submenus of the system menu can be requested using either the arrow keys or the function keys.

☞ **NOTICE - RESET!**

Every time you made changes or adjustments to the settings in the system, you should perform a RESET to return the machine to its initial position.

- Press the **STOP** key 2 times

■ **Entering the service code**
Entering the service code allows you to access the access-protected submenus of the system menu.

- Press the P key
- Press the service code F3 key
- Enter the service code numbers using the numeric keypad. The code is: 50190

  Press the P key to confirm

■ **Viewing the total piece counter**
With this counter, the total number of finished pieces can be displayed. The total piece counter cannot be reset.

- Press the P key
- Press the additional programs F4 key
- Press the piece counter F3 key

The machine piece counter: 0000000 is displayed.

D.3 Programming

D.3.1 System menu

■ **Eprom seam parameters**
This function allows you to copy the factory-programmed fixed seams from the Eprom back to the seam program.

- Press the [P] key
- Press the Init parameters [F1] key
- Press the Eprom seam parameters [F4] key
- Enter seam 01 using the numeric keypad.

■ **Specifying the order of the seams**
The setting refers to the selected seam program. The order for sewing the seams can be set at will. When the order is set, existing seam numbers are overwritten or new seam numbers are written.

- Press the [F1] key
- Press the [F4] key

The display shows the marking of the seam program and the seam numbers.

20 **01** 02 03 04

Mark the seam number to be changed using the cursor:

20 01 **02** 03 04

Open the Overwrite function:

- Press the [ENT] key

Enter a new seam number using the numeric keypad:

20 **01** **04** 03 04

Confirm your input and exit the menu:

- Press the [P] key

The display shows the new order of the seams.

20 **01** 03 04

■ **Copying seam numbers**
Use this function to copy the properties of a factory-programmed seam program or of your self-configured seam program into other seam programs.
The existing properties of a seam will be completely overwritten by this process.

1. Call up the seam program (destination) to which you wish to copy the seam program (source):

- Press the [M] key

2. Enter two-digit seam number using the numeric keypad, e.g. 02

- Press the [P] key
- Press the Init parameters [F1] key
- Press the Copy seam numbers [F2] key
- Enter the two-digit seam number using the numeric keypad.

The display shows * O.K. PLEASE WAIT* to indicate that the copying process has been completed successfully.

■ **Deleting a seam**
Call up the seam program and mark the seam number you wish to delete (seam number is highlighted in black).

- Press the [←] or the [→] key
- Press the [P] key
- Press the Init parameters [F1] key
- Press the Delete seam [F5] key

D.3 Programming

D.3.1 System menu

- Enter the seam number on the numeric keypad
- Confirm the safety prompt and press the [ENT] key

☞ **NOTICE - Erasing a seam number!**

When erased, the seam number will be removed from all seam programs into which it had been inserted

■ Entering a seam name

A seam program can be named using plain text.

Call up the seam program.

- Press the [P] key
- Press the Init parameters [F1] key
- Press the Enter seam name [F1] key
- Use the numeric keypad to enter a number combination or text. To enter letters, press and hold the required color-coded function key and press the corresponding color-coded number key for the letter on the numeric keypad. To enter spaces between text or number combinations, press the “Left” or “Right” arrow key.

To delete a letter:

- Press the [9] key 4 times

Confirm your input and exit the menu:

- Press the [P] key!

■ Copying the current seam to the memory stick

Programmed seam programs can be copied to the memory stick as backup copies.

Select the seam program.

- Insert the memory stick into the USB port
- Press the [P] key
- Press the Init parameters [F1] key
- Press the key [F6] Machine<-- > Stick
- Press the key [F1] Active seam --> Memory stick
- Enter the desired seam number on the numeric keypad

■ Downloading the current seam to the memory stick

To restore or change seams, you can download seam programs from the memory stick. For this purpose, an unused location is selected or an existing seam program is overwritten.

- Insert the memory stick into the USB port
- Press the [P] key
- Press the Init parameters [F1] key
- Press the key [F6] Machine <-- > Stick
- Press the key [F2] Stick --> Active seam
- Enter the desired seam number on the numeric keypad

D.3 Programming

D.3.1 System menu

■ **Copying variables to the memory stick**
All variables (global parameters/special parameters) can be stored on the memory stick as backup copies.

- Insert the memory stick into the USB port
- Press the [P] key
- Press the Init parameters [F1] key
- Press the key [F6] Machine <-- > Stick
- Press the key [F3] Machine memory <--> Stick

Confirm the safety prompt.

- Press the [ENT] key

■ **Downloading variables from the memory stick**
All variables (global parameters/special parameters) can be downloaded from the memory stick to the program control memory in order to restore the machine configuration.

- Insert the memory stick into the USB port
- Press the [P] key
- Press the Init parameters [F1] key
- Press the key [F6] Machine <-- > Stick
- Press the key [F4] Stick --> Machine memory

Confirm the safety prompt.

- Press the [ENT] key

☞ **NOTICE - Current configuration!**

If this function is used to download all variables from the memory stick to the program control, all current seam programs will be overwritten.

■ **Running the clamp motor in permanent test**
For testing purposes, the clamp motor can be run in continuous operation to check for constant machine movement.

- Press the [P] key
- Press the Diagnostics [F2] key
- Press the Clamp transport [F3] key
- Press the Clamp motor permanent test [F2] key

Confirm the safety prompt.

Press the [ENT] key

The clamp motor runs permanently until it is stopped. To stop the motor:

- Press the **Stop** key

■ **Testing the thread trimmer**
By entering a three-digit value, you can determine when the thread trimmer is activated. The input must be checked for a machine cycle and corrected if required.

- Press the [P] key
- Press the Diagnostics [F2] key
- Press the Sewing motor [F2] key
- Press the Thread trimmer [F2] key

Start or stop the machine cycle again.

- Press the [0] key

D.3 Programming

D.3.2 Service menu start level

The service functions of the service menu are called up via direct access from the start level or from level 1. Service functions support the work process during production at the machine.

Meaning of the start level functions
The function keys on the start level are assigned to the symbols below them. These symbols cannot be changed and remain visible at all times.

F1 Call up service menu level 1
F2 Correction of photocell for sewing piece pickup / insertion distance length
F3 Change fixed seam end point / photocell correction for seam end
F6 Actuate thread clamp manually
F7 Load bobbin full
F8 Reset loading process

■ **Calling up level 1 of the service menu**

- Press the F1 key

■ **Correction of photocell for sewing piece pickup / insertion distance length**
This setting refers to the selected seam. The techniques used to determine the seam beginning vary with the equipment of the machine.
Equipment for endless zippers without closure: The seam beginning is determined by the scan point of the photocell used for picking up the sewing piece. This setting therefore refers to the correction of the photocell.
Equipment for cut-to-length zippers with closure: This equipment works without a photocell at the loading station. The seam beginning is therefore determined by a fixed length of the insertion distance. The setting determines the length of the insertion distance.

- Press the F2 key

The cursor automatically marks the value that can be changed. To adjust this value step by step:

- Press the ← or the → key

Enter a completely new numerical value:

- Enter a number combination on the numeric keypad.

Confirm your input and exit the menu:

- Press the P key

☞ **NOTICE - Checking the setting!**

The setting must be checked using a sewing piece and corrected if required.

■ **Changing a fixed seam end point**
The setting refers to the selected seam.
The techniques used to determine the seam end vary with the equipment of the machine.
The seam end of the sewing piece is determined based on the position of the guide laser. The sewing piece is lined up with the guide laser. The setting refers to a fixed sewing distance.

- Press the F3 key

The cursor automatically marks the value that can be changed. To adjust the value step by step:

- Press the ← or the → key

Enter a completely new numerical value:

- Enter a number combination on the numeric keypad

Confirm your input and exit the menu:

- Press the P key

D.3 Programming

D.3.2 Service menu start level

NOTICE - Checking the setting!

The setting must be checked using a sewing piece and corrected if required.

■ **Confirming the thread clamp manually**
After the needle thread has been threaded, the thread clamp is actuated manually to protect the needle thread from being pulled out of the needle when the machine cycle starts.

- Press the F6 key

■ **Filling the bobbin**
Insert the thread and fill the bobbin:

- Press the F7 key
- Press the F8 key

Acknowledge the status messages on the display:

If the message BOBBIN EMPTY is displayed, insert a full bobbin and

- Press the ENT key

If the display shows the message BOBBIN: 004 M when a full bobbin is inserted

- Press the F7 key
- Press the F8 key

NOTICE - Sensitivity of remaining thread monitor!

If the bobbin is empty and the display does not show a status message, the photocell sensitivity must be adjusted (see Section S, Service instructions)

■ **Resetting the loading process**
This function depends on the mode of the machine cycle. It refers only to machine movements that can be performed before the automatic cycle.
The machine movements will be reset to the initial position.

- Press the F8 key

D.3 Programming

D.3.3 Service menu level 1

Meaning of the level 1 functions
The function keys on level 1 are assigned to the symbols above them as shown on the display. The settings of the Global Parameters menu (GP) menu and of the Special Parameters (SP) menu, which can also be called up from this level, are described in separate chapters.

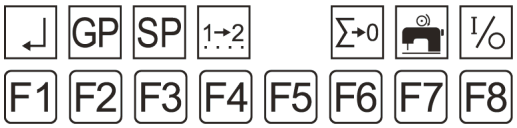

F1 Back to start level
F2 Call up the Global Parameters menu
F3 Call up the Special Parameters menu
F4 Specify the order of the seams
F6 Initialize the day counter
F7 Manual winding
F8 Select machine control inputs/outputs

■ **Specifying the order of the seams**
The setting refers to the selected seam program. The order for sewing the seams can be set at will. When the order is set, existing seam numbers are overwritten or new seam numbers are written.

- Press the F1 key
- Press the F4 key

The display shows the marking of the seam program and the seam numbers.

01 **01** 02 03 04

Mark the seam number to be changed using the cursor:

01 01 **02** 03 04

Open the Overwrite function:

- Press the ENT key

Enter a new seam number using the numeric keypad:

01 01 **04** 03 04

Confirm your input and exit the menu:

- Press the P key

The display shows the new order of the seams.

01 **01** 03 04

Delete the seam number:

- Mark the seam number using the cursor and delete it
- Press the M (delete) button

Confirm deletion and exit the menu:

- Press the P key

☞ **NOTICE - Seam sequences!**

Just as the order of the seams can be selected at will, a seam can be written into a seam program once or several times. A seam program may consist of up to 6 seams.

■ **Initializing the day counter:**
Use this function to reset the day counter for a program cycle to zero.

- Press the F1 key
- Press the F6 key

The day counter has been reset to zero.

Display: PIECES: 0000

D.3 Programming

D.3.3 Service menu level 1

■ **Manual winding**

This function is used to wind thread from the thread reel to the bobbin. To start the function:

- Press the F1 key
- Press the F7 key
- Press any key to finish.

☞ **NOTICE - Remove the needle thread!**

To prevent needle thread and hook thread from becoming entangled, the needle thread must be removed up to the thread lever.

■ **Selecting machine control inputs/outputs**

This menu is used for troubleshooting and for the manual testing of machine cycle settings. The outputs (OUT) can be selected and tested separately. The corresponding inputs (INP) are displayed for an active output. Additionally, the selected output can be switched intermittently.

Activated inputs/outputs are marked with highlighted numbers.

01	02	03	04	05	06	07	08	09	10
11	12	13	14	**15**	16	17	18	19	20
21	22	23	24	25	26	27	28	29	30
31	32	33	34	35	36	37	38	39	40
41	42	43	44	45	46	47	48	49	50
51	52	53	54	55	56	57	58	59	60

☞ **NOTICE - Machine movements!**

If outputs are activated, the machine will perform the corresponding functions. Before activating the outputs, remove all unnecessary objects within the operating range of the machine.

Select output:

- Press the F1 key
- Press the F8 key

Select number line:

- Press the ↑ or the ↓ key

Mark the output number by moving the corresponding function number using the cursor. The cursor takes on the shape of an arrow.

- Press the ← or the → key

Activate output:

- Press the ENT key

The function number is highlighted in black. The output is active.

Disable output:

- Press the ENT key

Switch output to intermittent operation:

- Use the cursor to mark the function number.
- Hold down the ENT key for approx. 3 seconds

The function number is highlighted in black and flashes. The output is active intermittently.

Switch off intermittent operation of the output:

- Press the ENT key

The function number is highlighted in black. The output is still active.

Disable output:

- Press the ENT key

D.3 Programming

D.3.3 Service menu level 1

Outputs						
Valve	**Output number**			**Cylinder number**	**Signal output**	**Valve type**
Y01	01	Close clamp		01	X07 Pin02	3/2 way
Y02	02	Move clamp in / out sideways		02	X07 Pin03	5/2 way
	10	Thread clamp			X07 Pin06	
Y11	10	Blow light barrier clear		10	X07 Pin06	3/2 way
Y15	15	Vacuum off/on		15	X07 Pin01	3/2 way
Y20	20	Fabric clamp forward/back		20	X07 Pin08	5/2 way
Y21	21	Open/close fabric clamp		21	X07 Pin09	5/2 way
Y26	26	Clamp downholder up/down		26	X11 Pin30	5/2 way
Y28	28	Fabric stop forward/back		28	X07 Pin10	5/2 way
Y30	30	Open clamp		01	X11 Pin18	3/2 way
	31	Thread trimmer			X07 Pin05	
	36	Thread tension lift			X07 Pin04	
Y47	47	Parts blowing			X07 Pin07	3/2 way
Y49	49	Holding stamp up/down		49	X11 Pin26	5/2 way
Y54	54	Zipper channel		54	X11 Pin22	5/2 way
Y55	55	Roller stitch width		55	X11 Pin23	3/2 way

Inputs 1931-7					
Switch	**Input number**		**Switch type**		**Signal input**
S01	01	Start switch	Foot button	Make	X09 Pin01
S04	04	Clamp reference point	Initiator NPN	Break	X09 Pin04
S05	05	Move clamp away sideways	Initiator NPN	Make	X09 Pin05
S11	11	Clamp curve start, sewing start	Initiator NPN	Make	X09 Pin11
S12	12	Slower speed at control cam	Initiator NPN	Make	X09 Pin12
S19		Sewing motor needle up	Initiator NPN	Make	Plug DAC/SYNC
S20	20	Photocell safety	Initiator NPN	Make	X13 Pin20
S21	21	Photocell fly length / scan	Photocell NPN		X13 Pin21
S23	23	Needle thread monitor	Touch probe		Plug X2
S25	25	Remaining thread monitor bobbin (lockstitch)	Photocell NPN		X13 Pin25

D.3 Programming

D.3.3 Service menu level 1

Terminal assignment for lockstitch (1-4):
S23 *Needle thread monitor

Terminal assignment *Plug X2:

yellow	1
green	2
white	3
brown	4

1	2	3	4	5	6	7	8

D.3 Programming

D.3.4 Global parameters

Global parameters are values that control the basic functions of the machine. Changing global parameters will result in changes to all stored seam programs.

■ **Calling up/exiting the Global Parameters menu**
The minimum and maximum input values are limited by the program control. Values that are not within the limits will not be accepted, but reduced to the respective minimum or maximum value.

Switch from start level to level 1:

- Press the F1 key

Call up the Global Parameters menu:

GP

- Press the F2 key

Browse through the list:

- Press the ← or the → key

Move to line on list:

- Press the ↑ or the ↓ key

Change parameters:

- Press the ENT key
- Use the numeric keypad to enter a new value or
- Press the ← or the → key

Confirm input:

- Press the ENT key

Exit the menu and save changed parameters:

- Press the P key

D.3 Programming

D.3.4 Global parameters

No.	Programmable global parameters (F2)
01	TILL CLAMP SIDEWAYS FWD: Scan and piece pickup after clamp movement forward / time interval
02	TILL CLAMP DOWN .....: Lower clamp after clamp movement forward for piece pickup / time interval
03	TILL VACUUM OFF .....: Switch vacuum off after clamp down / time interval
04	THREAD LENGTH: Bobbin full
05	TILL CLAMP INSERTING: Clamp insertion delay / time delay
06	SEWING END ->CL.SIDEW.: Clamp movement sideways to the rear after sewing is completed / time interval
07	TIME AFTER CLAMP OPEN: Clamp movement right to programmed position after clamp up / time interval
17	TILL TENSION OPEN ..: After end of seam, time until tension lift on / time interval
18	DURATION OF TENS. OPEN ...: Duty cycle of tension lift
19	TILL THREAD CLAMP FORW. ..: After clamp up, time until thread clamp forward and blowing on / time interval
20	DUR.THREAD CLAMP FORW.: Duration of thread clamp forward and blowing / time interval
25	TILL FABRIC CLAMP FORW. Time until fabric advances and lowers
28	TILL FABRIC CLAMP OPENS Time during which the fabric clamp opens and returns
29	TILL SWING RETAINER DWN: Lower swing retainer after seem has been sewn / time interval
30	TILL RETAINER SWINGS ...: Pull out swing retainer after retainer has been lowered / time interval
31	DUR. OF PULLING RETAINER: Pull swing retainer out and move retainer up / duration of the process
32	BLOW OUT THE PART .....: Blow out pieces / time duration
33	TILL THRUST FOR REMOVAL: Removal of pieces / duration of the process
35	THREAD CATCH. "UP" POS: Thread lever in top position / time interval
36	SWITCH ON POS.OF THREAD CUTTING: Switch-on position for thread cutting: Input value 01-255
37	TRIMMING SPEED .....: Speed when cutting the thread
38	DURATION OF TRIMMING: Duty cycle for thread cutting
39	TURN BACK .....: Thread lever reversing angle
40	PROCESS IN STEPS .....: Gradual machine cycle

D.3 Programming

D.3.5 List of special parameters

Special parameters are values that refer to only one specific seam program. Changes of these values affect only the currently selected seam program for which the setting is made.
Special parameters are edited on four different levels (level 2 to level 5).
Special parameters can be functions that may be enabled or disabled or parameter values that are set on lists.

■ **Calling up/exiting the Special Parameters menu:**

Select the seam program and switch from the start level to level 1:

- Press the F1 key

Call up the Special Parameters menu:

SP

- Press the F3 key and call up the submenu.

Exit the menu:

- Press the P key

No.	Overview of the programmable special parameters on lists (F3)
01	CLAMP POSITION RIGHT: Clamp position right during piece pickup (needs to be programmed for the 1931-7)
02	ADVANCE TO STOP: Advance distance to stop
03	INSERTION SPEED: Clamp insertion speed
04	CLAMP SPEED: Clamp transport speed
05	DISTANCE TILL SEWING: Distance to cover before sewing starts
06	SEWING SPEED 1: Sewing speed 1 seam beginning
07	SEWING SPEED 2: Sewing speed 2 main seam
08	SEWING SPEED 3: Sewing speed 3 seam end
09	DISTANCE WITH SPEED 1: Distance for slow sewing (sewing speed 1)
10	DISTANCE WITH SPEED 3: Distance for slow sewing at seam end (sewing speed 3)
12	THREAD MONITOR ON AFTER: Needle thread monitor on (distance in mm after sewing has started)
13	NEEDLE THREAD MONITOR FILTER: Filter for needle thread monitor (response delay)
14	REMAINING THREAD MONITOR FILTER: Filter for hook thread monitor (response delay)
16	START BARTACK LENGTH ...: Start bartack length only for lockstitch

D.3 Programming

D.3.5 List of special parameters

No.	Overview of the programmable special parameters on lists (F3)
17	END BARTACK LENGTH .....: End bartack only for lockstitch
18	STITCH LENGTH SEAM BEGINNING: Stitch length at seam beginning (input 5.0 mm max.)
19	DISTANCE OF STITCH LENGTH: Distance of stitch length at seam beginning
20	1ST STITCH LENGTH / CURVE: 1st stitch length in rounding (input 5.0 mm max.)
21	DISTANCE OF STITCH LENGTH: Distance of 1st stitch length
22	2ND STITCH LENGTH / CURVE: 2nd stitch length in rounding (input 5.0 mm max.)
23	DISTANCE OF STITCH LENGTH: Distance of 2nd stitch length
24	STITCH LENGTH MAIN SEAM: Stitch length for main seam (input 5.0 mm max.)
25	STITCH LENGTH SEAM END ..: Stitch length at seam end (input 5.0 mm max.)
26	DISTANCE OF STITCH LENGTH: Distance of stitch length at seam end
27	ST.LENGTH TRIMM.STITCH: Stitch length of trimming stitch (input 5.0 mm max.)
28	CHOICE OF TRIMMING ST. ..: Trimming stitch / preselection
30	START MODE / INSERT: Start mode preselection
32	BLOWING MODE .....: Blowing, mode (00: off - 01 on)
33	HOLDING STAMP MODE ...: Holding stamp and swing retainer, mode (00 off - 01 on)
34	SWING RETAINER MODE: Swing retainer, mode (00: off - 01 on)

D.3 Programming

D.3.6 Level 2 special parameters / functions

Functions of level 2 submenus:
The following section describes the special parameters that can be enabled or disabled as functions.

F1 Back to start level
F2 Enable / disable functions

■ **Enabling / disabling functions**
Functions can be enabled or disabled for the selected seam program. This enabling/disabling process covers three levels: Levels 3, 4 and 5. The changes made are reflected on the display:

Fig. 4: Enabled functions are displayed as symbols 1 and 2 .

Fig. 5: Disabled functions are removed from the seam pictograph1 and from the inner frame 2 of the display.

Start the menu:

- Press the F2 key

Level 3 is displayed.

Meaning of level 3 submenus:

F1 Back to start level
F2 Switch photocell for seam beginning on or off
F3 Switch photocell for seam end on or off
F8 Call up next level (level 4)

Fig. 4/5

Fig. 4

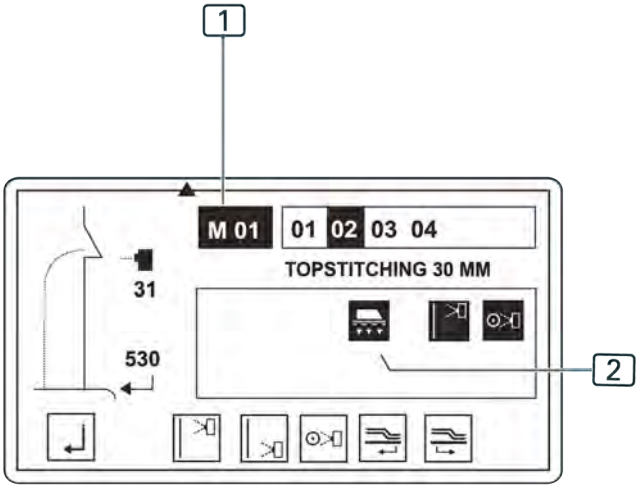

Fig. 5

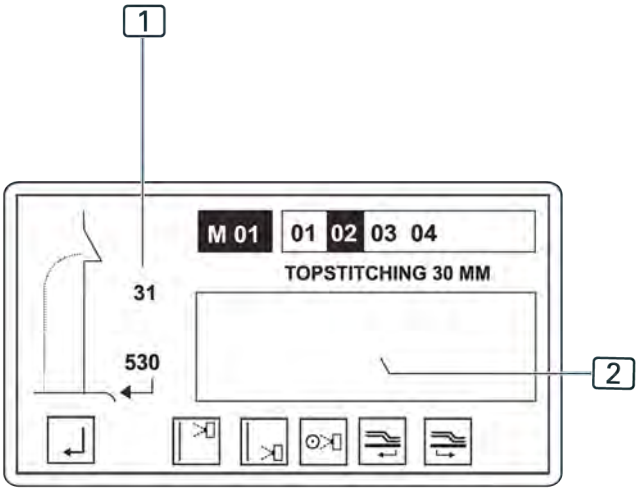

D.3 Programming

D.3.7 Level 3 special parameters / functions

■ **Switching photocell for seam beginning on or off**

If the photocell that scans the initial position of the seam is switched off, the machine control requires a fixed insertion distance for the machine cycle. Switching off the photocell results in a switch-over to a fixed insertion length (see Fig. 5). This function is directly related to the Photocell correction functions of the Service menu.

- Press the F2 key

The alternating request of this function switches between the modes:
photocell for seam beginning and fixed insertion distance.

■ **Switching photocell for seam end on or off**

If the photocell that scans the end position of the seam is switched off, the machine control requires a fixed point for the seam end for the machine cycle. Switching off the photocell results in a switch-over to a fixed seam end point. This function is directly related to the Photocell correction functions of the Service menu.

- Press the F3 key

The alternating request of this function switches between the modes:
Photocell for seam end and fixed seam end point.
This function cannot be activated unless the function Sewing to a fixed seam end point (level 4) is disabled.

D.3.8 Level 4 special parameters / functions

Meaning of level 4 submenus:

F1 F2 F3 F4 F5 F6 F7 F8

F1 Back to level 3
F2 Switch vacuum on or off
F7 Switch sewing to a fixed seam end point on or off
F8 Call up next level (level 5)

■ **Enabling/disabling the vacuum**

Used as a fixing aid for the clamp transport unit when picking up the sewing piece, the vacuum can be switched off to check the machine movement. To enable / disable the function:

- Press the F2 key

☞ **NOTICE - Operation without vacuum!**

During normal production operation, the vacuum should always be enabled as failures in the machine cycle may otherwise occur.

■ **Switching sewing to a fixed seam end point on or off**

If this function is enabled, the seam program is generally set for a fixed seam end point. Enabling this function will simultaneously disable the function "photocell for end of seam" (level 3).

- Press the F7 key

D.3 Programming

D.3.9 Level 5 special parameters / functions

Meaning of level 5 submenus:

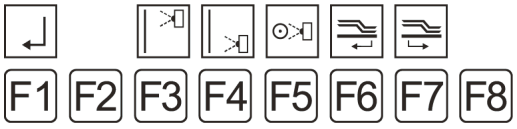

F1 Back to level 4
F3 Switch needle thread monitor on or off
F4 Switch hook thread monitor for chain stitch upper part on or off
F5 Switch remaining thread monitor for lockstitch upper part on or off
F6 Clamp position after seam end
F7 Clamp waiting position

■ Switching the needle thread monitor on or off

For testing purposes, the needle thread monitor can be switched off. To enable or disable this function:

- Press the F3 key

NOTICE - Operation without needle thread monitor!

During normal production, the needle thread monitor should always be switched on as the seam program will otherwise not be stopped if the thread breaks.

■ Switching the remaining thread / hook thread monitor on or off

Depending on the specifications of the sewing head, the machine is equipped with either a remaining thread monitor (for lockstitch upper part) or a hook thread monitor (for chain stitch upper part). Both monitors can be switched on or off for testing purposes. To enable or disable the function:

for chain stitch upper part:

- Press the F4 key

for lockstitch upper part:

- Press the F5 key

NOTICE - Operation without thread monitor!

During normal production, the remaining / hook thread monitor should always be switched on as the seam program will otherwise not be stopped if the thread breaks.

■ Switching the clamp position after the seam end on or off

If this function is enabled, the closed clamp moves to the clamp transport end point after the end of the seam before releasing the sewing piece. To enable or disable this function:

- Press the F6 key

■ Moving the clamp to the waiting position

If this function is enabled, the clamp moves to the waiting position after the seam end.
SP Par. 05, e.g. 48 cm

- Press the F7 key

D.3 Programming

D.3.10 Level 2 special parameters / lists

Parameter settings for level 2 submenus: The following section describes the special parameters that are set on parameter lists. When a submenu is requested, only those positions of the parameter list are displayed that refer to the machine function.

Move to line on list:

- Press the ↑ or the ↓ key

Meaning of the Special Parameters menu

F1 Back to start level
F3 Select start modes, list
F4 Set machine head parameters, list
F5 Set stitch lengths and bartacks, list
F6 Parameters for clamp transport, list

■ **Selecting modes**

Four modes can be set in this menu:

- Start mode
- Blowing mode
- Holding stamp mode
- Swing retainer mode

- Press the F3 key Change parameters:
- Press the ENT key
- Use the numeric keypad to enter a new value or
- Press the ← or the → key

Confirm input:

- Press the P key

Adjustable values:

Start mode

The selected start mode determines how the machine cycle is started and executed. Three modes are available:

- Mode 00
- Mode 01
- Mode 02

The meaning of the settings for the machine cycle is described in Section B.3.9, Machine cycle.

Blowing mode

This mode determines if the function "Blow sewing piece off" is enabled or disabled after stitching down.

- 00, disabled
- 01, enabled

Holding stamp mode

Two modes are available for the holding stamp. 1931-7

- Mode 00: The holding stamp is disabled.
- Mode 01: The holding stamp is lowered after the vacuum switches on and the foot button is released. When the vacuum switches off, the holding stamp is raised.

D.3 Programming

D.3.10 Level 2 special parameters / lists

■ **Setting the machine head parameters**

This list is used to set all parameters for the functions of the sewing head.
The minimum and maximum input values are limited by the program control. Values that are not within the limits will not be accepted, but reduced to the corresponding minimum or maximum value.

- Press the F4 key

The parameter list is shown on the display.

☞ **NOTICE - Sewing speed!**

The possible settings for the sewing speed refer to the following sewing ranges:
06 Sewing speed 1 to the start distance
07 Sewing speed 2 to the center distance
08 Sewing speed 3 to the seam end

■ **Setting stitch lengths and bartacks**

All settings for the configuration of the seam can be changed using this list.
The minimum and maximum input values are limited by the program control. Values that are not within the limits will not be accepted, but reduced to the respective minimum or maximum value.

- Press the F5 key

The parameter list is shown on the display.

■ **Parameters for clamp transport**

This list is used to adjust all settings for the clamp movement.

- Press the F6 key

The parameter list shown on the display has the following meaning:
01 Clamp insertion as seen from the right end of the rail
02 Stop position 600 mm is a safety value. Only values higher than 600 mm can be input
03 Setting range: 35 % - 80 %
04 Setting range: 35 % - 99 %
05 Range of the curve where no sewing is performed. If the value “0” is input here, the sewing process starts immediately.

D.3 Factory settings

D.4.1 Factory settings for global parameters

■ M 01 global parameters

No.	Global parameters 1931-7	Value	Unit
01	Clamp forward till pickup	0.8	sec
02	Till clamp down	0.3	sec
03	Till vacuum off	0.3	sec
04	Thread length, bobbin full	003	m
05	Till clamp inserting	0.2	sec
06	Sewing end -> Cl. sideways	0.1	sec
07	Time after clamp open	0.5	sec
17	Till tension open	0.00	sec
18	Duration of tens. open	0.2	sec
19	Till thread clamp forward	0.5	sec
20	Dur. thread clamp forward	0.6	sec
25	Till fabric clamp forward	0.4	sec
28	Till fabric clamp opens	0.2	sec
29	Till swing retainer down	0.0	sec
30	Till retainer swings	0.0	sec
31	Dur. of pulling retainer	0.0	sec
32	Blow out the part	0.5	sec
33	Clamp moves to stacker	0.0	sec
35	Thread lever in top position	023	INC
36	Switch on pos. of trimm.	100	INC
37	Cutting speed	180	Rpm
38	Duration of trimming	0.35	sec
39	Turn Back	25	INC
40	Process in steps	00	

D.4 Factory settings

D.4.2 Factory settings for special parameters

■ M 01 special parameters

No.	Seam 01 - stitch width 30 mm	Value	Unit
01	Clamp position right	240	mm
02	Advance to stop	700	mm
03	Insertion speed	50	%
04	Clamp speed	85	%
05	Distance till sewing	02	mm
06	Sewing speed 1	1200	Rpm
07	Sewing speed 2	3800	Rpm
08	Sewing speed 3	1200	Rpm
09	Distance sewing speed 1	20	mm
10	Distance sewing speed 3	20	mm
12	Thread monitor on after	05	mm
13	Needle thread monitor filter	20	mm
14	Bobbin monitor filter	00	mm
16	Start bartack length	00	mm
17	End bartack length	05	mm
18	Stitch length seam beginning	2.0	mm
19	Distance of stitch length	08	mm
20	1st stitch length / curve	3.7	mm
21	Distance of stitch length	22	mm
22	2nd stitch length / curve	3.6	mm
23	Distance of stitch length	40	mm
24	Stitch length main seam	3.0	mm
25	Stitch length seam end	2.0	mm
26	Distance of stitch length	10	mm
27	Stitch length trimming stitch	1.5	mm
28	Choice of trimming stitch	00	
30	Start mode / insert	01	
32	Blowing mode	01	
33	Holding stamp mode	01	
34	Swing retainer mode	00	

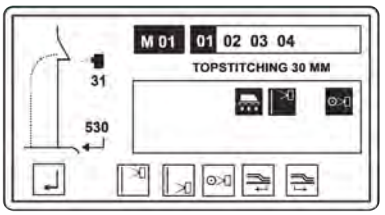

D.4 Factory settings

D.4.2 Factory settings for special parameters

■ M 01 special parameters

No.	Seam 01 - stitch width 30 mm	Value	Unit
01	Clamp position right	300	mm
02	Advance to stop	720	mm
03	Insertion speed	50	%
04	Clamp speed	85	%
05	Distance till sewing	02	mm
06	Sewing speed 1	1200	Rpm
07	Sewing speed 2	3800	Rpm
08	Sewing speed 3	1200	Rpm
09	Distance sewing speed 1	20	mm
10	Distance sewing speed 3	20	mm
12	Thread monitor on after	10	mm
13	Needle thread monitor filter	20	mm
14	Bobbin monitor filter	00	mm
16	Start bartack length	00	mm
17	End bartack length	08	mm
18	Stitch length seam beginning	2.0	mm
19	Distance of stitch length	08	mm
20	1st stitch length / curve	3.7	mm
21	Distance of stitch length	22	mm
22	2nd stitch length / curve	3.6	mm
23	Distance of stitch length	40	mm
24	Stitch length main seam	3.0	mm
25	Stitch length seam end	2.0	mm
26	Distance of stitch length	10	mm
27	Stitch length trimming stitch	1.5	mm
28	Choice of trimming stitch	00	
30	Start mode / insert	01	
32	Blowing mode	01	
33	Holding stamp mode	01	
34	Swing retainer mode	01	

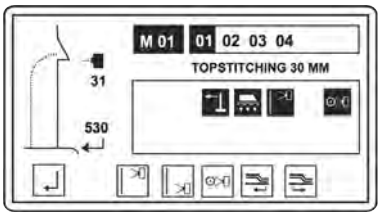

DÜRKOPP ADLER GmbH
Potsdamer Str. 190
33719 Bielefeld Germany
Phone: +49 (0) 521 925 00
Email: service@duerkopp-adler.com
www.duerkopp-adler.com

Subject to design changes - Part of the machines shown with additional equipment - Printed in Germany
© Dürkopp Adler GmbH - Original Instructions - 7911 931740 EN - 00.0 - 08/2022