beisler SEWING

2171-5

Operating Instructions

Contents

The working instructions are divided into four sections:

A General notes
Safety instructions for the operating and service personnel and for the operator of the machine.

B Operating instructions
Instructions for the personnel operating and handling the machine.

C Service instructions
Instructions for the personnel in charge of the initial start-up, setting up and service of the machine.

D Programming instructions
Instructions for the service personnel in charge of preparing and setting up the machine.

Scope of the working instructions
These working instructions describe the SHORT SEAM AUTOMAT 2171-4 of Beisler GmbH and apply only to those machine parts and components that are contained in the scope of delivery of the SHORT SEAM AUTOMAT 2171-4.
They do not apply to accessories or machine parts (e.g. sewing head) from third parties that the machine is equipped or retrofitted with. For those components, the working instructions of the respective manufacturer or supplier apply.

Section A General notes

Section A General notes

Contents **Page**

A.1 Safety instructions

Important information for the operator!
This machine has been manufactured in keeping with the latest technological developments and is operationally safe. However, it may present potential hazards, particularly if it is operated by inadequately trained personnel or if it is not used correctly:

- For personnel operating and handling the machine, the operator must prepare written instructions in a reasonable form and in the language of the operating personnel based on these working instructions (Germany: Accident Prevention Regulations UVV VBG 1 § 7.2).
- Use the operating instructions to familiarize the operating personnel with the functions, operation, and care of the machine and check to see if the operating personnel fully understands these instructions.
- Use the service instructions to familiarize the service personnel with the setting up and maintenance of the machine.
- For any modifications of the machine that have not been approved by Beisler GmbH in writing, the operator is fully responsible.
- The contents of the working instructions are subject to change without further notice.
- Concerning translations into foreign languages, the German version of these working instructions is binding.
- Should you encounter problems that are not mentioned in these working instructions, please contact your supplier immediately for your own safety. Please do not hesitate to contact Beisler if you have any suggestions that help to improve this product.
- **Keep these working instructions close to the machine so that safety instructions and information on operation, setting-up, and maintenance are always accessible.**

Warranty
Beisler GmbH warrants the safety, operatability, and repair without charge of the short seam automat 2171-4 for a period of 6 months under the condition that:
- the machine is used exclusively for the intended purpose and serviced in accordance with the information in these working instructions,
- modifications of the machine are carried out only with prior written approval of Beisler GmbH,
- only original spare parts or accessories approved by Beisler GmbH are used. For a complete list of all approved spare parts, please contact Beisler GmbH.

If the machine is used for more than 10 hours per day (shift operation), the warranty period is reduced to 3 months.
The warranty period starts with the delivery of the machine to the operator.

A.1 Safety instructions

Exclusion of liability
Beisler GmbH warrants the faultlessness of the product as set forth by their advertisements, product information and these working instructions. Other product characteristics are not warranted.
Beisler GmbH is not responsible for the profitability or for the correct function of the short seam automat 2171-4 if it is used for other purposes than those defined in section „Correct use“.
Beisler GmbH is not responsible for damage that arises from the use of non-defined and non-approved spare parts or accessories.

A.1 Safety instructions

Important information for the operating personnel!
Please note that any work to the SHORT SEAM AUTOMAT 2171-4 must be carried out only by trained operating personnel:

- **Operating personnel means persons:**
  that have been given initial instructions for sewing automats and that have been trained for the operation and handling of the SHORT SEAM AUTOMAT 2171-4 on the basis of these operating instructions,
  that have been informed about potential risks arising from their work with the machine,
  that are capable of assessing their work with the machine due to occupational experience and instruction of the safety regulations and of recognizing potential hazards during work.
- Cleaning of the machine or of machine parts must be performed only by personnel that has been informed about potential hazards arising during the cleaning work.
- Prior to the initial operation of the SHORT SEAM AUTOMAT 2171-4, read the **operating instructions** carefully so that you can make full use of the advantages of the machine and to prevent damage.

Important information for the service personnel!
Please note that service work to the SHORT SEAM AUTOMAT 2171-4 must be carried out only by authorized and adequately trained expert personnel:

- **Expert personnel means persons:**
  that have aquired their expertise by a special training in machine technology or electrical engineering or by a special advanced training or a comparable qualification,
  that have acquired the knowledge required to perform all works for setting up and servicing the SHORT SEAM AUTOMAT 2171-4 from a training by Beisler GmbH,
  that are capable of assessing their work with the machine due to occupational experience and instruction of the safety regulations and of recognizing potential hazards during work.

- Prior to carrying out any service work to the SHORT SEAM AUTOMAT 2171-4, read the **entire working instructions** carefully so that you can make full use of the advantages of the machine and to prevent damage.

A.1 Safety instructions

A.1.1 Symbols used in the working instructions

WARNING!

is used if non-observance may cause serious or even lethal injuries.

CAUTION!

is used if non-observance may cause medium to minor injuries or damage.

NOTE!

is used for hints and useful information.

A.1.2 Symbols used on the machine

WARNING: DANGER!

Caution! Observe working instructions.

WARNING: HIGH VOLTAGE!

Caution! Prior to opening, pull out power plug.

A.1 Safety instructions

A.1.3 General safety instructions

Correct use
- The SHORT SEAM AUTOMAT 2171-4 is a sewing machine. It is to be used for runstitching wing and side seam pockets.
- The machine can be used for processing all conventional materials for outerwear.
- The machine has been designed for permanent operation in industry.
- The SHORT SEAM AUTOMAT 2171-4 has been tested for electromagnetic compatibility and is suited for installation in industrial operating rooms.

Incorrect use
- The SHORT SEAM AUTOMAT 2171-4 must not be operated in rooms that do not comply with the location requirements.
- The SHORT SEAM AUTOMAT 2171-4 must not be operated in the vicinity of devices or systems that produce strong magnetic fields as otherwise the correct function of the program control may be impaired.

Safety requirements
- DIN EN, Part 1:1991-11, Part 2:1995-06
  Safety of machines
- DIN EN 60601, Part 1:1994-05
  Safety regulations for electrically operated measuring and control installations, general requirements.
- DIN EN 50178 (VDE 0160): 1998-04
  Equipment of power systems with electronic devices.
- DIN EN 50082 (VDE 0839) Part 2:1997-11
  Electromagnetic compatibility, basic specification, immunity to interference.
  Part 1: Domestic, business and commerce, small enterprises.
  Part 2: Industry.
- DIN EN 60204 (DIN VDE 0113): 1993-06
  Electrical equipment of industrial machines.

Safety devices
The SHORT SEAM AUTOMAT 2171-4 is equipped with a circuit-breaker **(program stop switch)** that stops all machine movements and the sewing process when actuated manually.

Power supply connection
The power supply of the machine is established with a properly grounded power supply connection with:
- 230 V ± 10 %, 50/60 Hz, grounding plug.
- Fusing: 16 A
- Power consumption: 1.3 kW

Compressed air supply
The machine must be supplied by an on-site compressed air source.
- Operating pressure: 6 bar.
- Compressed air quality: oil-free
- Compressed air consumption: 16 NL

Location and storage requirements
Installation in sheltered, closed rooms.
- Room temperature: 10° C to 45° C
- Relative humidity: 80 % max.

Disposal
- Please discard the packaging material in accordance with existing disposal directives. Section C1, Delivery of the machine, contains a list of the packaging materials used.
- The machine contains reusable materials. Therefore, when discarding the machine, ask your local magistrate or community office about the possibilities of recycling.

Section B Operating Instructions

Section B Operating Instructions

Contents **Page**

B.1 Description of the machine

B.1.1 Functional units

Fig. 1

All functional units of the SHORT SEAM AUTOMAT 1911-4 / 1912-4 are mounted to the height-adjustable table frame and freely accessible.

Transport and sewing unit

- 1 Main clamp with linear rail
- 2 Thread holder
- 3 Sewing head

Control unit

- 5 Memory card
- 6 Operating panel

Worktable

- 4 Tray
- 8 Stop with cloth clamp
- 9 Working plate with perforation for vacuum
- 14 Height-adjustable table leg
- 18 Storage table
- 19 Bundle clamp

Emergency switch

- 7 Program stop switch

Power supply system

- 10 Control box
- 11 Sewing motor control
- 12 Main switch, emergency off switch

Compressed air / Vacuum supply system

- 13 Vacuum switch
- 17 Vacuum pump (optional)
- 20 Compressed air device

Operating switches

- 15 Footswitch for bundle clamp
- 16 Footswitch for machine operation

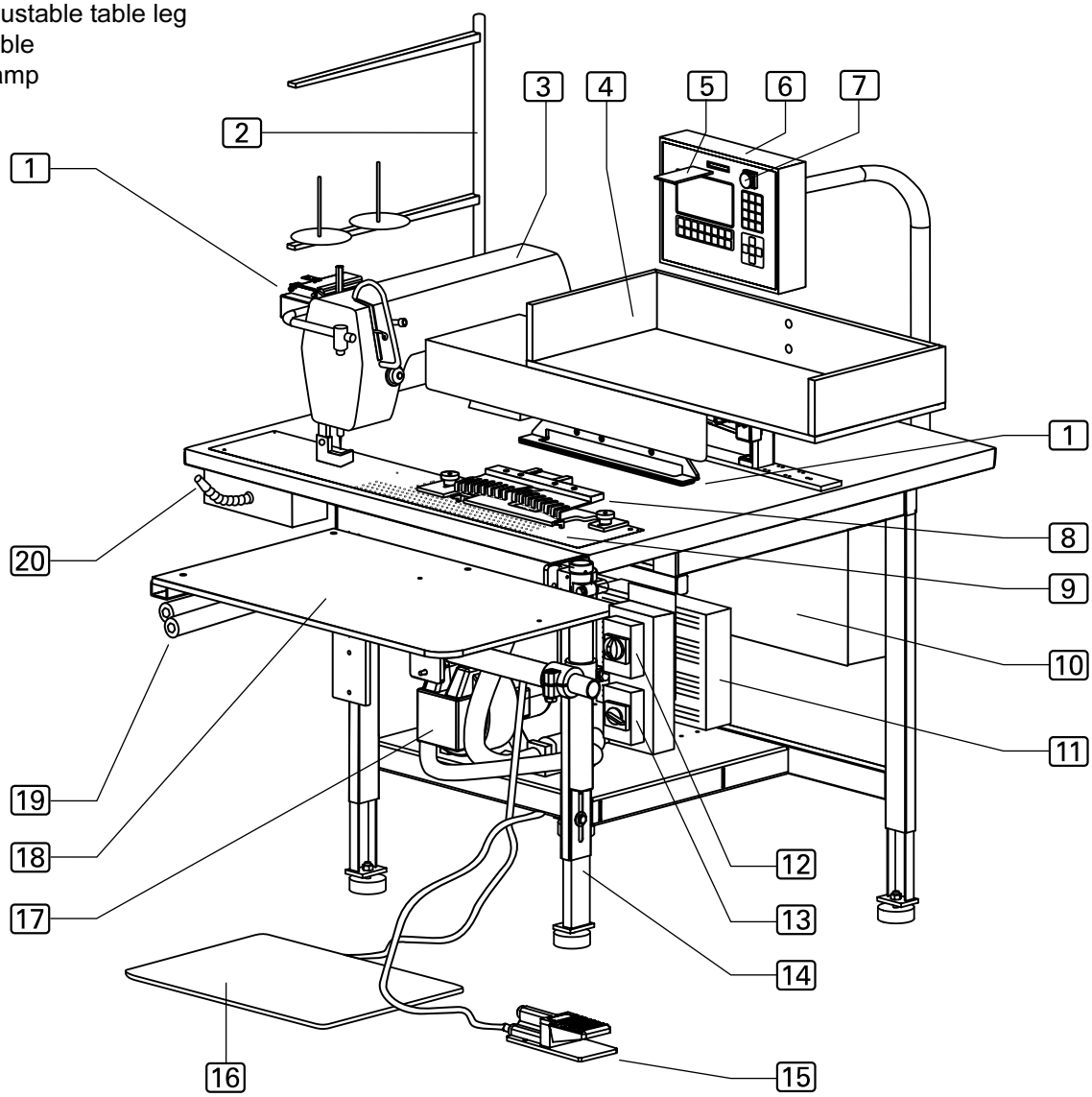

B.2 Functions of the machine

B.2.1 Functional sequence

The short seam automat 2171-4 allows the automatic pre-sewing of wing and side seam pockets.

- The sewing piece is positioned manually,
- it is fixed on the working plate by vacuum and cloth clamp,
- depending on the pocket type, the scissors set either one tick (wing seam pocket) or two ticks (side seam pocket),
- the sewing piece is transported automatically to the sewing head where it is sewn and blown off.

B.2.2 Line-up and alignment

Bundle clamp (optional)

The sewing pieces to be processed are clamped in bundles and prepared in the bundle clamp. The bundle clamp is operated by compressed air and opened or closed using the footswitch.

Stop, quick-change kit, **Fig. 2:**

The machine is equipped with two quick-change kits that are used depeneding on the pocket type to be effected.

Side seam pocket kit, sewing program M 01:

- Guide rail [1] with curve pattern for scanning the curve contour,
- Cloth stop [2] with curve contour,
- Clamp rail [3] with curve contour,

Wing pocket kit, sewing program M 02:

- Cloth stop [4] straight,
- Clamp rail [5] with straight contour.

Fig. 3: The sewing pieces [5] are lined up at the cloth stop [1] for an exactly parallel routing of the seam and for positioning the ticks.

Cloth clamp

The cloth clamp [1] fixes the sewing pieces during the scissors' cutting phase.

Scissors, **Fig. 3:**

The scissors [2] and [4] set the tick:

- for a side seam pocket, at the beginning and at the end of the seam,
- for a wing seam pocket, only at the beginning of the seam.

If the sewing program for the wing seam pocket (**M 02**) has been selected, the function of the right scissors [2] is automatically disabled.

Fig. 2/3

Fig. 2

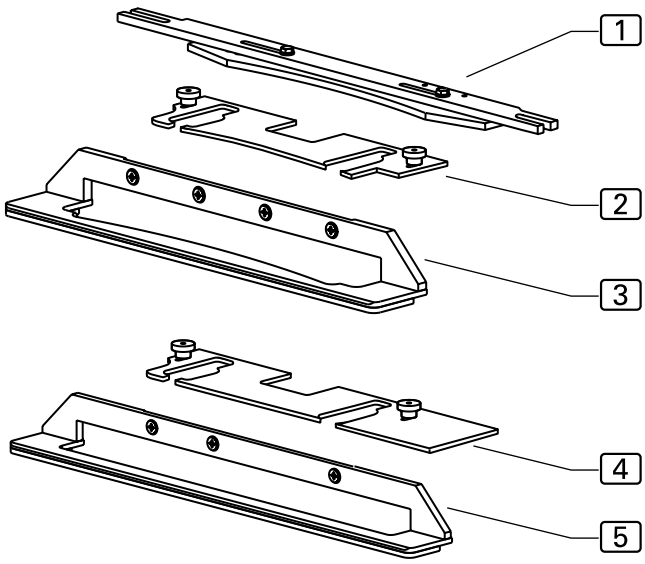

Fig. 3

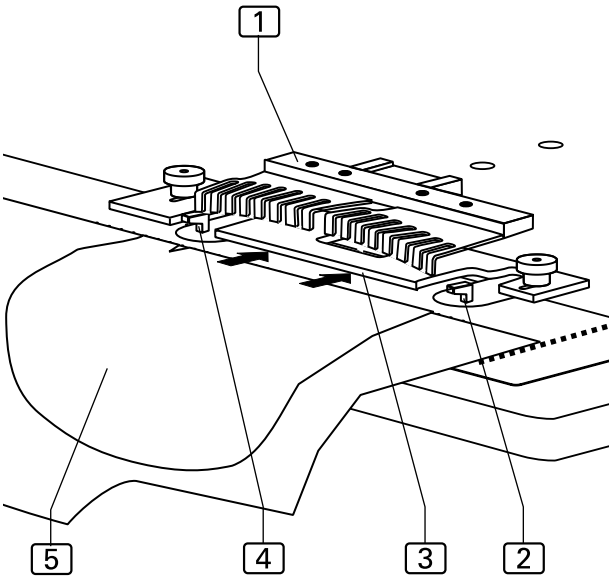

B.2 Functions of the machine

B.2.3 Transport and sewing

Fig. 4

Vacuum

If the sewing piece has been aligned at the stop and at the marking tick, the vacuum aspirates it toward the working plate to fix it there.

Main clamp

The parking position of the main clamp is to the left of the sewing head. The main clamp [4] moves right to the insertion station and is positioned above the sewing piece [3] and lowered onto it. The fixing devices are disabled, the cloth clamp is raised, and vacuum is switched off.

The main clamp pushes the sewing piece from the insertion station on the working plate to the sewing head.

Sewing head

The sewing head [2] performs only the functions sewing stitch and thread cutting. All other functions, such as seam curve route or determining the beginning and the end of the seam, are acquired by the sensor system and controlled by the program control unit in accordance with the set values.

The thread stock and the thrad supply of the sewing head are monitored by sensors (top thread monitor and spool rest thread monitor). The thread holder can hold two thread spools.

Fig. 4

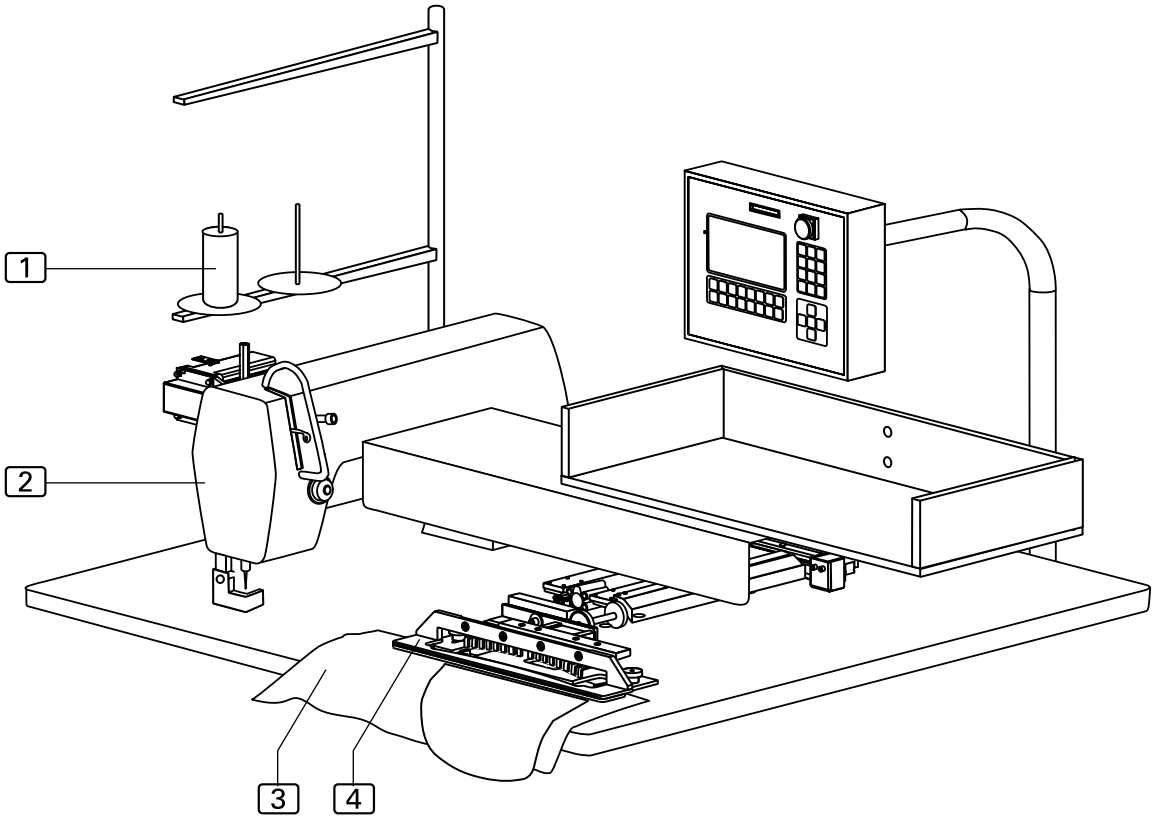

B.2 Functions of the machine

B.2.4 Switches

The short seam automat is equipped with three different types of switches:

- Emergency switch for stopping a sewing program,
- supply switches for current and vacuum,
- control switches for controlling the machine operation.

Emergency switch

Program stop switch

When the program stop switch [1] is pressed, all machine movements and the sewing process are stopped immediately.

The switch engages when pressed. Rotating the switch in the clockwise direction will unlock the switch, and it moves back to its original position.

The control program performs a reset.

When the footswitch is depressed, the machine moves to zero position and is then ready for operation again.

Supply switches

Main switch

The main switch [2] is used to turn the power supply of the machine on or off. For safety reasons, the machine must be turned off using the main switch when it is standing still for an extended period; in this case, all functional units are deactivated. The main switch also serves as an additional emergency off switch.

Vacuum switch

The vacuum switch [3] is used to switch the vacuum supply of the aspiration system on and off.

Control switches

Footswitch for bundle clamp

When this footswitch [4] is depressed, the bundle clamp opens. When the switch is released, the bundle clamp closes.

Footswitch for machine operation

This footswitch [5] is used to control the operating steps of the SHORT SEAM AUTOMATE and to start the fully automatic machine operation.

Fig. 5

Fig. 5

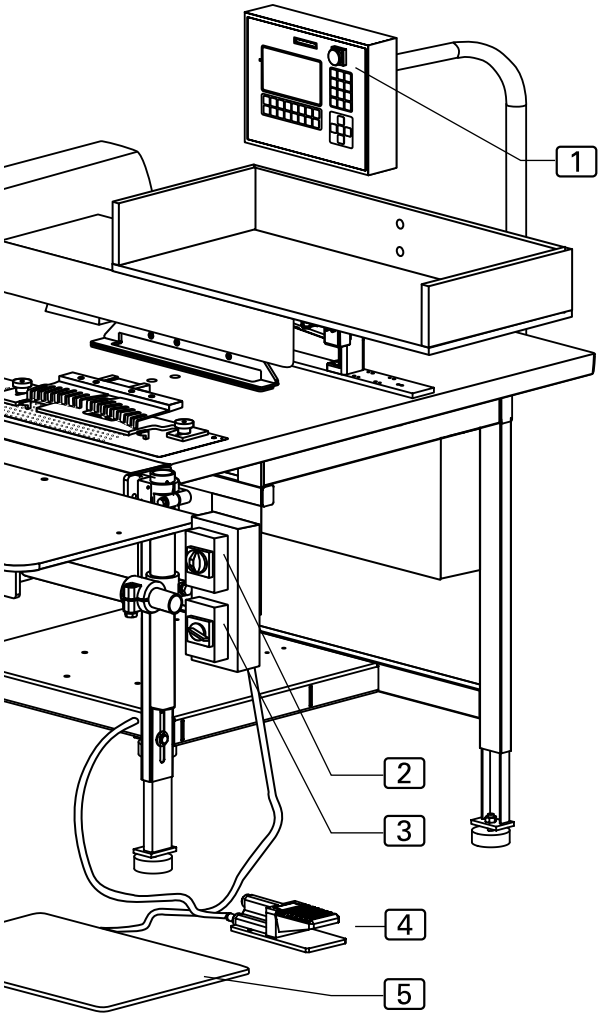

B.2 Functions of the machine

B.2.5 Operating panel

Display

During the operation of the machine, the display [1] shows the values of the selected sewing program. If menus were requested, the menu symbol or the corresponding parameters of the function are displayed.

Indicator panel

[8] Seam symbol
[9] Sewing program description (a sewing program may consist of several seams)
[10] Sewing program seam number
[11] Seam description
[12] Display field for the enabled seam functions
[13] Bar for requestable submenus

Memory card slot [2]

The memory card is the medium for storing the bakkup copies of all program control data. Programs can be copied to and stored on the memory card and reloaded into the machine control when required.

Program stop switch

If the program stop switch [3] is pressed during the operation of the machine, all machine movements and the sewing process are stopped.

Numeric keypad

The numeric keypad [4] is used to enter all changeable number values.
By pressing the M key, you can request the desired sewing programs.
By pressing the P key, you can request submenus, confirm inputs and exit the programming mode.

Arrow keys

By pressing the UP or DOWN arrow key [5], you can move the cursor in the selected menu one line up or down.
By pressing the RIGHT or LEFT arrow key, you can mark the desired parameter in the selected menu using the cursor or browse forward or backward if the parameter list consists of several pages.

Function keys

You can use the function keys [6] to request the menus for setting or changing machine functions on the selected level.

Fig. 6

Fig. 6

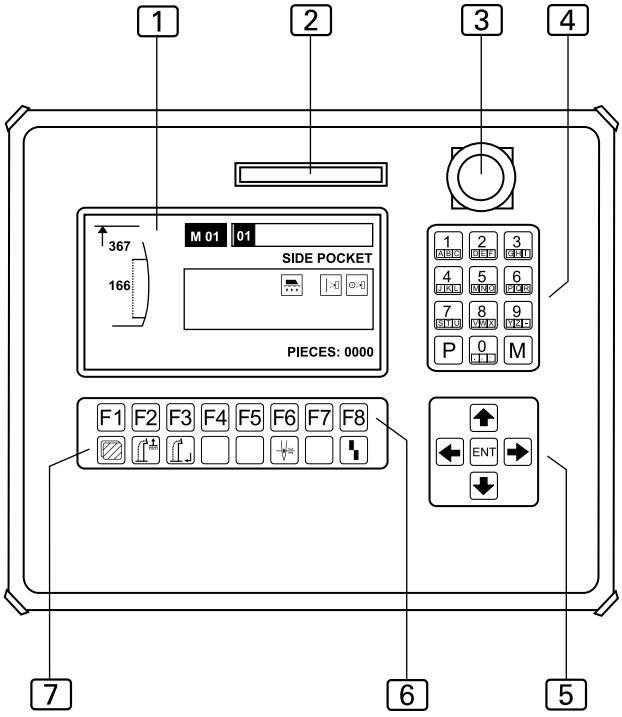

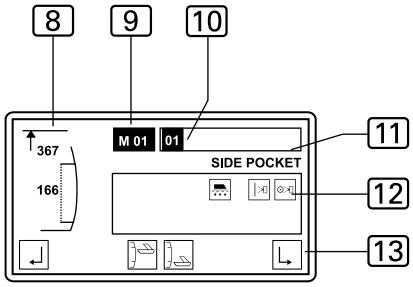

Symbol bar

The symbol bar [7] indicates menus that can be requested directly from the start menu using the function keys [6].
All other functions of the machine can be set or changed by selecting the corresponding menus on the different program levels. The corresponding symbols appear on the display of the operating panel.

B.3 Operation

B.3.1 Safety instructions for operation

Machine operation:

WARNING - Machine operation intervention!

The machine is driven by electric motors and by compressed air. Any attempt to stop the moving parts of the machine or to tamper with the movements by hand may cause severe injuries.

- **Keep hands away from machine during machine operation!**
- **During the sewing process, keep hands away from the operating range of the needle!**
- **If a failure is encountered during machine operation, press the program stop switch immediately!**

Clothing:

CAUTION - Unsuited work clothing!

The moving parts of the machine may catch and draw in loose clothing which may cause severe injuries.

- **When operating the machine, do not wear wide or open clothing!**
- **Make sure that sleeves are tight-fitting and properly closed!**

B.3 Operation

B.3.2 Preparing the machine

Prior to the production start, check the supply connections, connect the machine to the compressed air and power supply systems and prepare the sewing head.

1. Insert needle, pass top thread through needle and insert spool for bottom thread into sewing head (see working instructions of sewing head manufacturer or supplier).

2. **Fig. 7:** Connect machine to compressed air supply by inserting the plug-in connector [2] of the compressed air supply hose into the compressed air receptacle in the operating room. The pressure of the compressed air is reduced to the required operating pressure of 6 bar by a pressure reducer [1]. Check manometer [3] to see if the correct operating pressure is set. The pressure reducer is installed at the side mounting wall of the worktable.

3. Connect machine to power supply system.

WARNING - Electric shock!

Contact with current-carrying components may cause a lethal electric shock. Check plug and cable before connecting machine to power supply system.

- **Do not use damaged plugs, sockets or cables to connect the machine to the power supply system!**
- The machine is connected to a power source of 230 V ±10 % at 50/60 Hz.
- Before connecting the machine to the power supply system, check to see if the ratings of the power supply system in the operating room correspond with the ratings on the nameplate at the rear of the machine.
- If the ratings for voltage (V) and maximum current (A) do not match, the machine must not be connected.
- Insert the grounding plug into a properly grounded and fused power socket.
- Make sure that the power supply cable is not subject to tensile or pressure forces.

4. Turn machine on by moving main switch to position **I**.

5. Turn vacuum pump of the machine on and move vacuum switch to position **I** or open on-site vacuum supply.

Fig. 7

Fig. 7

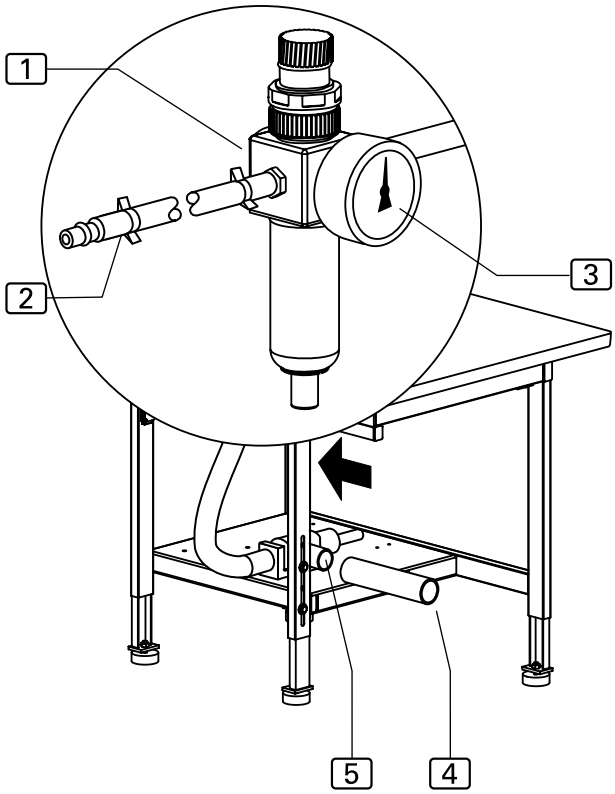

NOTE - Vacuum supply!

If the machine is equipped with the optional vacuum pump, the vacuum supply is now ready for operation.
If the machine is prepared for the on-site vacuum supply system, the on-site vacuum hose [4] must be connected to the sleeve [5] of the vacuum valve.

The machine is ready for operation.

B.3 Operation

B.3.3 Selecting the sewing program

After the machine has been turned on and the control program has been activated, the sewing program that had been selected last is set.
Sewing programs [1] are stored in the memory (**M**). The program control memory can store up to 50 sewing programs (**M 01-M 50**).
Fig. 8: For each sewing program, up to six seam numbers [2] (01, 02, 03, 04, 05,06) can be assigned.

The program control of the machine is equipped at the factory with a standard program:

- Sewing program **M 01** with seam 01 for the automated presewing of side seam pockets.
- Sewing program **M 02** with seam 02 for the automated presewing of wing seam pockets.

A sewing program may be combined with one seam, with several seams or with all four seams.
If a sewing program with several seam numbers is requested, the seams are made in the sequence of the seam numbers from left to right.
The sequence of the seam numbers is arbitrary.
Please make sure that the **handwheel** of the main clamp is set correctly for the seam number of the seam that is made first (left position in the line of seam numbers).

1. Select sewing program at operating panel.

Request memory:

- Press [M] key.

Select sewing program number, e.g. 01:

- Press [0] and [1] keys.

The selected program is activated immediately.

2. Select seam number of desired seam.

Move cursor to seam number:

- Press [←] or [→] key.

Confirm selection:

- Press [ENT] key.

3. Rotate main clamp handwheel to the selected seam number.

Fig. 8/9

Fig. 8

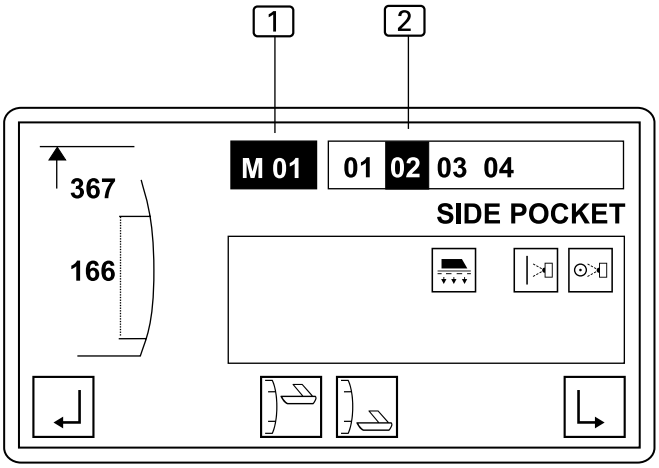

Fig.9

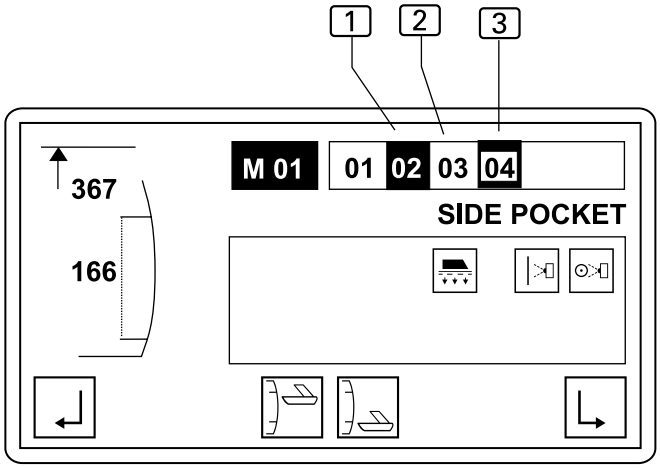

Fig. 9: Display during seam number selection:

[1] Active seam number
[2] Passive seam number
[3] Seam number is selected

B.3 Operation

B.3.4 Activating additional seam numbers

1. Select seam number of desired seam.

Move cursor to seam number:

- Press ← or → key.

Confirm selection:

- Press ENT key.

The seam number of the activated seam appears blackened.

B.3.5 Deactivating a seam number

1. Select seam number of desired seam.

Move cursor to seam number:

- Press ← or → key.

Confirm selection:

- Press ENT key.

The seam number of the deactivated seam is no longer blackened.

B.3.6 Setting the thread clamp manually

Before the first start of a sewing program, the top thread clamp must be activated to protect the top thread from being pulled out of the needle when the machine starts.

- Press F6 key.

B.3.7 Resetting the day counter to zero

Use this function to reset the day counter for a production run or for a completed working cycle to zero.

1. Move to level 1.

   Press F1 key.

The display shows the symbols for selectable functions on this level.

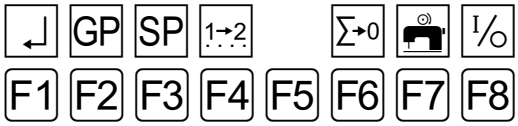

2. Request the day counter reset function.

- Press F6 key.

The day counter is now reset to zero.

3. Return to start level.

   Press F1 key.

Display: PART: 0000

B.3 Operation

B.3.8 Aligning sewing pieces

The sewing pieces to be processed are prepared by the (optional) bundle clamps at the tray and aligned for tucking on the working table.

Operating the bundle clamp:

1. Open bundle clamp by depressing footswitch for bundle clamp and keep footswitch depressed while the sewing pieces in the bundle clamp are sorted and arranged properly.
2. Close bundle clamp by releasing footswitch.

Aligning the sewing pieces:

Fig. 9: Usually, the sewing pieces [7] are premarked by a marking tick [6]. Otherwise, a marking [2] must be drawn on the working plate or applied using tape. In that case, the line-up point is the right end of the sewing piece.

1. Align sewing piece [7] for parallel routing of seam to the long side [4] of the stop rail.
2. To achieve the correct beginning of the seam, line up sewing piece with the marking tick exactly to the left scissors [6] or to the marking [2] on the working plate.

☞ **NOTE - Function of the scissors!**

The function of the two scissors depends on the selected sewing program:
If the sewing program for side seam pockets (**M 01**) has been selected, both scissors [3] and [5] are enabled.
If the sewing program for wing seam pockets (**M 02**) has been selected, the function of the right scissors [3] is automatically disabled.

☞ **NOTE - Control of the seam!**

The control of the seam depends on the selected sewing program.

- **Fig. 11:** The sewing program for the side seam pokket (**M 01**) is controlled by entering a **fixed distance A for the beginning of the seam** (start tick to needle) and by entering a **fixed seam distance B** (length of desired seam, start tick to end tick).
- The sewing program for the wing seam pocket (**M 02**) is controlled by entering a **fixed distance A for the beginning of the seam** (start tick to needle). The photocell [1] recognizes the end of the seam (end of cloth, photocell bright).

Fig. 10/11

Fig. 10

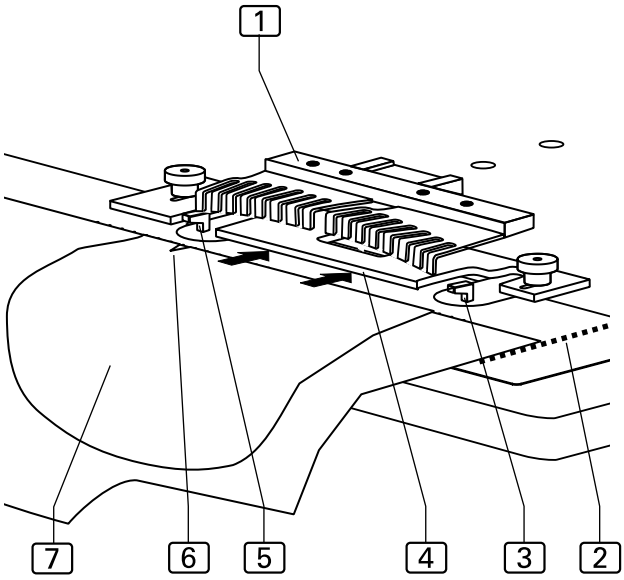

Fig. 11

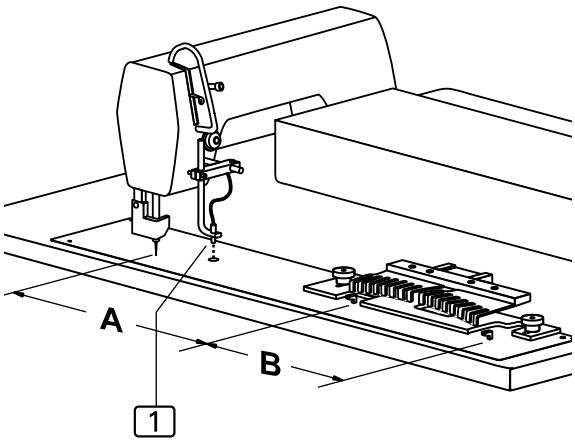

B.3 Operation

B.3.9 Starting machine cycle

A machine cycle can be started in two different sequences (mode 00, mode 01, mode 02). The factory default is mode 00 which allows a largely fully automatic machine cycle.

Controlling machine cycle in mode 00:

1. Line up sewing piece.
2. Depress footswitch for machine operation and keep depressed:
   - The vacuum is switched on
3. Release footswitch:
   - The cloth clamp moves forward, lowers and fixes the sewing piece.
4. Depress footswitch for machine operation:
   - Further machine cycle is automatic:
     The scissors sets the tick (M01 left and right scissors, M02 left scissors only).
     The main clamp moves right to the insertion station, picks up the sewing piece and transports it to the sewing head where the sewing piece is tukked and ejected. The main clamp returns to the left start position. The next machine cycle starts.

☞ **NOTE - Supplying sewing pieces!**

As soon as the main clamp starts transporting the sewing piece, the next sewing piece can be lined up.
The footswitch remains deactivated until the main clamp reaches its start position; after that, the next machine cycle can be started.

Controlling machine cycle in mode 01:

Mode 01 requires an additional operating step for controlling the machine cycle.

1. Line up sewing piece.
2. Depress footswitch for machine operation and keep depressed:
   - The vacuum is switched on.
3. Release footswitch:
   - The cloth clamp moves forward, lowers and fixes the sewing piece.
4. Depress footswitch for machine operation:
   - Further machine cycle is automatic:
     The scissors sets the tick (M01 left and right scissors, M02 left scissors only). The main clamp returns to the insertion station, lowers and picks up the sewing piece.
5. Depress footswitch for machine operation:
   - Further machine cycle is automatic:
     The main clamp transports the sewing piece to the sewing head where the sewing piece is tucked and ejected. The main clamp returns to the left start position. The next machine cycle can be started.

☞ **NOTE - Supplying sewing pieces!**

As soon as the main clamp starts transporting the sewing piece, the next sewing piece can be lined up.
The footswitch remains deactivated until the main clamp reaches its start position; after that, the next machine cycle can be started.

B.3.10 Resetting line-up process

This function depends on the selected machine cycle mode. It refers only to machine movements that can be executed before the start of the automatic process.
The machine movements can be reset gradually.

- Press F8 key (several times if required).

B.3 Operation

B.3.11 Stopping a sewing program

1. Press program stop switch.
   When this switch is pressed, all machine movements and the sewing process are stopped immediately. The switch engages when pressed.

To restart the machine after a program stop, all functions must be reset, and the machine must be returned to zero position by unlocking the program stop switch.

2. Unlock program stop switch.
   Slightly rotate switch in the clockwise direction. The switch returns to its original position.
   The control program performs a reset.
   When the footswitch is depressed, the machine moves to zero position and is then ready for operation again.

B.3.12 Moving machine to zero position

Prior to starting the production, after machine tests or after corrections to sewing programs, the machine must be returned to zero position for starting the machine cycle:
1. Press program stop switch.
2. Unlock program stop switch.

(See also Section B.3.11, Stopping a sewing program)

B.3.13 Turning the machine off

For extended work intermissions, the machine must be turned off completely.
1. Turn vacuum supply off by moving vacuum switch to position 0.
2. Turn power supply off by moving main switch to position 0.

B.3.14 Periodic cleaning of the machine

The machine must be cleaned after large production series or at least once a day, whichever occurs first.

CAUTION - Danger of injuries!

If the machine is put in motion accidentally, persons in its direct vicinity may be caught by moving parts which may cause injuries.
Prior to any cleaning work, disconnect the machine from the power supply!
- **Turn the machine off using the main switch.**
- **Remove the power plug from the socket and protect it from accidental reconnection.**

Periodic cleaning:
1. Remove fabric residues.
2. Using compressed air, blow off dust and thread residues at the sewing head, at the working plate, at the main clamp and at the linear rail.

Section C Service Instructions

Section C Service Instructions

Contents **Page**

C.1 Delivery of the machine

C.1.1 Packaging

The machine is delivered in a solid packaging box on a pallet. All packaging materials can be separated and reused.

- Pallet made of pine wood
- Packaging box made of plywood / transport carton
- Polyethylene film (PE)

☞ **NOTE - Shipping braces!**

During shipping, moving machine parts are protected with shipping braces (cable ties). The positions of all parts fitted with shipping braces are marked with red labels.
After the machine has been installed and aligned, the shipping braces must be removed.

☞ **NOTE - Damages in transit!**

If any damage presumably caused by incorrect transport is found when the machine is unpacked, please contact your supplier immediately.

C.1.2 Scope of delivery

The machine is delivered in an operative condition. The scope of delivery comprises:

Short seam automat with sewing head

- The machine is equipped with several customer-specific accessories. For checking the exact layout, the information on the delivery note is authoritative.
- Service kit with machine oil.

Operating panel and program control:

- Preinstalled (ready-for-use) operating panel.
- Memory card with factory-programmed standard sewing program.

Technical documents:

- Operating instructions.
- Service instructions
- Programming instructions.

C.2 Storage and location requirements

C.2.1 Floor quality

The floor of the room where the machine is to be installed must have a sufficient surface strength. The location of the machine must be free of vibrations.
If several machines are to be installed in one room, the static load bearing capacity of the ceiling must be considered.

Weight:
- Machine with accessories approx 200 kg

C.2.2 Interior climate

Climatic requirements for the operating room:
The machine must only be stored or operated in closed operating rooms.
- Room temperature +10 °C to +45 °C
- Relative humidity 80 % max.

C.2.3 Floor space required

For operation during production and for service works, the machine must be freely accessible from all sides. On all sides, there must be a minimum clearance of 1 m.

Machine dimensions:
- L x W x H 1700 x 1400 x 1700 mm

NOTE - Electromagnetic interference!

The machine must not be installed in the immediate vicinity of devices or electrical components (e.g. transformers) generating a strong magnetic field as otherwise the correct function of the program control may be impaired.

C.2.4 Supply connections

The machine requires on-site power and compressed air sources as well as vacuum connections unless the machine is equipped with a vacuum pump.

Power connection:
The power supply of the machine requires a properly grounded power connection with:
- Grounding plug 230 V ± 10 %, 50/60 Hz
- Fusing 16 A

NOTE - Peak voltages!

The correct function of the machine requires that the power system supplies a constant current. Peak voltages may particularly impair the stability of the program control.

Compressed air supply:
The on-site compressed air supply system must meet the following requirements:
- Operating pressure 6 bar
- Compressed air quality oil-free
- Compressed air consumption 4.16 NL

Vacuum source:
The on-site vacuum source must meet the following requirements:
- Displacement (minimum) 130 m³/h

C.3 Start-up

C.3.1 Machine table alignment

After the machine has been installed at the desired location, the machine table must be aligned:
- Set machine table to required height.
- Align machine table horizontally on all sides.

Setting table height:
1. **Fig. 1:** Lift machine: Connect lifting device to lift points (arrows) below the crossmembers. If the machine is equipped with optional transport rollers, release brakes before lifting.

☞ **NOTE - Stacker!**

If the machine is equipped with a stacker, the stacker must be lifted as well.

2. **Fig. 2:** Loosen lockscrews [2] on all guide rails.
3. Pull table legs [3] out to the desired length and retighten lockscrews [2].
4. Lower machine to floor.

Horizontal positioning of the machine table:
1. Place bubble level onto working plate.
2. **Fig. 2:** Loosen table leg lock nuts [1].
3. Align machine table horizontally on all sides by raising or lowering table legs as required.
4. Retighten table leg lock nuts.

☞ **NOTE - Shipping braces!**

Before the machine is connected to the energy supply sources, all shipping braces must be removed.
- Cut off cable ties.
- Remove labels.

Fig. 1/2

Fig. 1

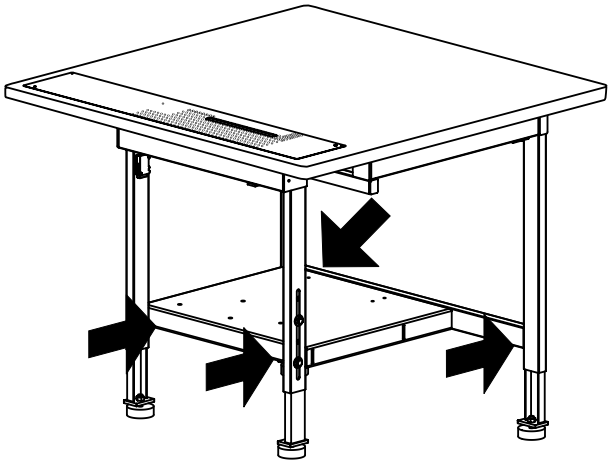

Fig. 2

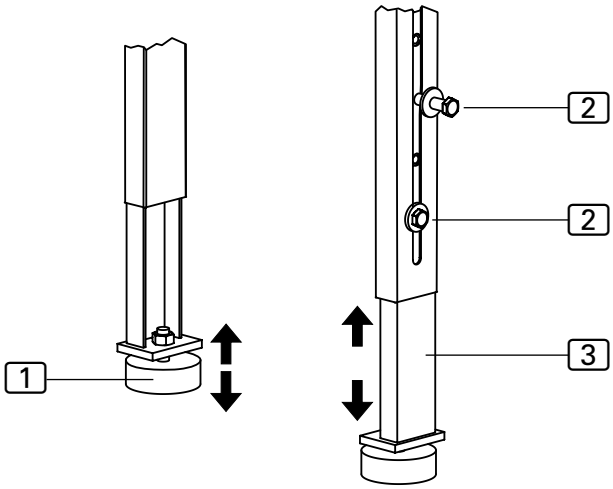

C.3 Start-up

C.3.2 Compressed air / vacuum connections

The compressed air connection is preinstalled on the machine. It comprises the following components:
- Pressure reducer [1] with manometer [4] and water separator [3],
- Pressure hose with push-in plug [2].

The pressure reducer is mounted to the side mounting wall of the worktable.

Connecting the machine to the compressed air supply system:
1. Connect pressure hose plug to on-site terminal unit.
2. Open on-site compressed air supply.
3. Set pressure reducer to a machine operating pressure of 6 bar by rotating pressure reducer knob [5] and read value on manometer [4]:
   - To increase pressure, rotate in clockwise direction,
   - To reduce pressure, rotate in counter-clockwise direction.

Connecting the machine to the vacuum supply system:
If the machine is equipped with the optional vacuum pump, no installation is required; the vacuum supply system is ready for operation.
If the machine is not equipped with a vacuum pump, it must be connected to the on-site vacuum source. The vacuum valve is located on the lower storage surface of the worktable.

☞ **NOTE - Required components!**

The following components must be available on-site:
- A vacuum hose with a minimum inner diameter of 1¼ " or (as required) an adapter or reducer for connecting the on-site vacuum hose to the sleeve (outer diameter 1¼ ") of the vacuum valve on the machine.
- A hose clamp with a minimum inner diameter of 1¼ ".

1. **Abb. 4:** Connect on-site vacuum hose [4] to sleeve [2] of vacuum valve [1].
2. Secure vacuum hose using hose clamp [3].
3. Open on-site vacuum source.

Fig. 3/4

Fig. 3

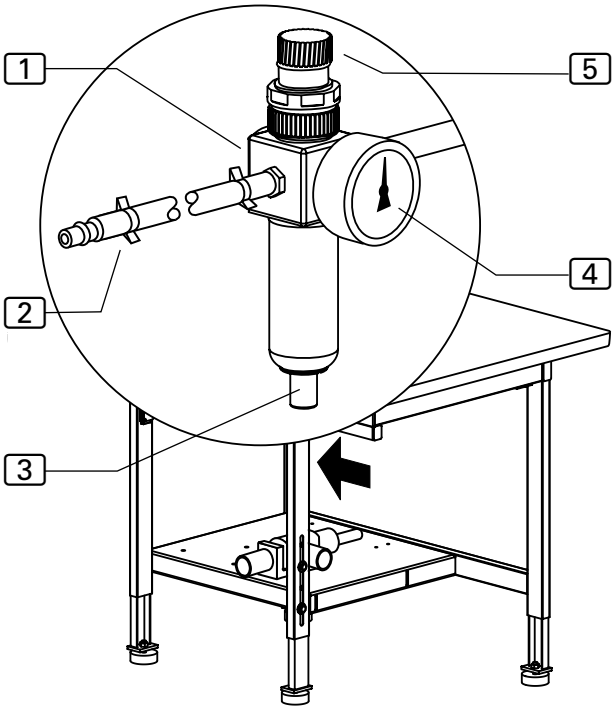

Fig. 4

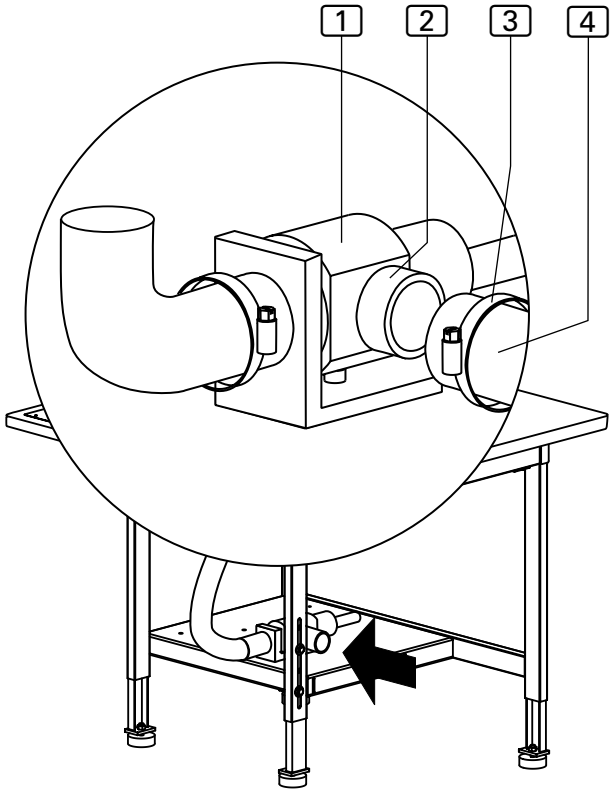

C.3 Start-up

C.3.3 Connecting the machine to the power supply

The power cable and the power plug are preinstalled on the machine. The footswitches for controlling the machine operation and the bundle clamp are installed as well.

Connecting the machine to the power supply system:

1. Put footswitches for machine operation and for bundle clamp onto desired locations on floor at front side of machine.
2. Insert power plug into socket.

WARNING - Electric shock!

Contact with current-carrying components may cause a lethal electric shock. Check plug and cable before connecting machine to power supply system.

- **Do not use damaged plugs, sockets or cables to connect the machine to the power supply system!**
- The machine is connected to a power source of 230 V ±10 % at 50/60 Hz.
- Before connecting the machine to the power supply system, check to see if the ratings of the power supply system in the operating room correspond with the ratings on the nameplate at the rear of the machine.
- If the ratings for voltage (V) and maximum current (A) do not match, the machine must not be connected.
- Insert the grounding plug into a properly grounded and fused power socket.
- Make sure that the power supply cable is not subject to tensile or pressure forces.
- Route the power supply cable in a way that ensures free access to and around the machine.

NOTE - Works to the electrical system!

Works to the electrical system of the machine must only be carried out by qualified and authorized expert personnel. Tampering with the machine without authorization makes the warranty void.

C.3.4 Safety check

Before the machine is released for operation, all safety devices must be checked for their correct operation.

CAUTION - Danger of injuries!

The safety devices protect the operating and service personnel while working on or with the machine.
If the safety devices are fully or partially inoperative, the machine must not be started up.

Perform safety check:

1. Check to see if the cover above the clamp transport unit is correctly and safely installed.
2. Check to see if the finger protection at the sewing head covers the needle effectively.
3. Make sure that the guide laser is not directed into the view area of the machine operator.
3. The main switch also serves as an emergency off switch. To check the function of this switch, turn the machine on, start a machine cycle and turn the machine off during the tucking process using the main switch. All operational movements of the clamp and of the sewing head must stop, and the program control must switch off.
4. Check the function of the program stop switch. Start a machine cycle and press the switch. All operational movements of the clamp and of the sewing head must stop.
5. Unlock the program stop switch. The program control starts a reset, and the clamp must return to its start position.

The machine is ready for operation.

C.4 Operation and shut-down

C.4.1 Working with the machine

Factory settings
The program control of the machine is delivered with two factory-installed standard programs:
- Sewing program **M 01** with seam 01 for the automated presewing of side seam pockets.
- Sewing program **M 02** with seam 02 for the automated presewing of wing seam pockets.

This sewing program is so powerful that it can be used for production.
It is furthermore perfectly suited for training operating personnel and can be used as a template for programming customer-specific sewing programs.
For details about the programming of sewing programs, please refer to Section D of the working instructions.

C.4.2 Machine shut-down

When the machine is to be shut down, it must be disconnected from all energy supply sources.

Disconnecting the machine from the power supply system:
1. Turn machine off using main switch. Move switch to position "0".
2. Remove power plug from socket and protect it against accidental reconnection.

Disconnecting the machine from the compressed air / vacuum supply system:
1. Shut off on-site compressed air / vacuum.
2. Remove compressed air hose plug from terminal unit.

☞ **NOTE - Dust-proof protection!**

If the machine is to be shut down for an extended period of time, it should be covered with a plastic tarpaulin.

C.5 Maintenance

WARNING - Electric shock!

Contact with current-carrying components may cause a lethal electric shock
If the machine is put in motion accidentally, persons in its direct vicinity may be caught by moving parts which may cause injuries.
Prior to any service, cleaning or maintenance works, disconnect the machine from the power supply system!

- **Turn the machine off using the main switch.**
- **Remove power plug from socket and protect it against accidental reconnection.**
- **If the power supply is not required for repair or set-up work, the machine must be disconnected from the power supply system.**

C.5.1 Inspection

The machine must be inspected annually.
The inspection comprises particularly the following items:

- safety devices of the machine,
- operativeness of the program control,
- correct function of inputs and outputs.

C.5.2 Cleaning

The machine must be cleaned after large production series, or at least once a day, whichever occurs first.

Cleaning the machine surfaces:

1. Disconnect machine from power supply system.
2. Remove fabric residues.
3. Using compressed air, blow off dust and thread residues at the sewing head, at the working plate, at the clamp and at the linear rail.
4. Wipe machine parts dry using a dry, clean cloth.

NOTE - Plastic surfaces!

Some parts of the machine surfaces are made of plastic materials. Solvents may dissolve plastics and make them unusable.
Do not clean the machine surfaces (particularly the operating panel) with cleaning agents that contain solvent.

C.5 Maintenance

C.5.3 Service

The following service works must be carried out in weekly intervals.

Oiling the clamp rail:
1. Disconnect machine from power supply.
2. Wipe clamp rail clean using a soft, oil-saturated cloth. The scope of delivery comprises 0.25 l of oil. When this oil is used up, you can order the special machine oil for service from the manufacturer or supplier of the machine.

Emptying the water separator:
1. Disconnect machine from power supply.
2. Drain water at pressure reducer water separator into suited container.
   Press button 1 at pressure reducer collector and keep pressed until all the water has been drained.

☞ **NOTE - Sewing head!**

For information about service of the sewing head, please refer to the working instructions of the sewing head.

Fig. 5

Fig. 5

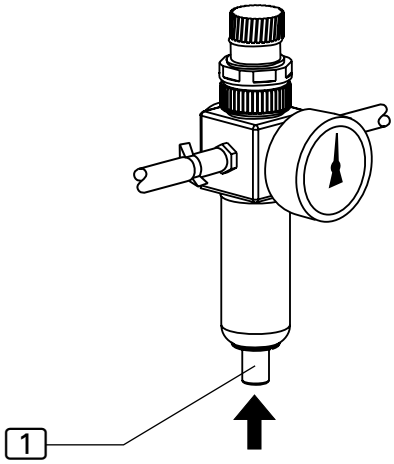

C.5 Maintenance

C.5.4 Repairs

Any repairs to the machine must only be carried out by:
- authorized Technical Service,
- personnel that has been instructed about the setting up and maintenance of the machine on the occasion of a training by the supplier or manufacturer of the machine.

Use only original spare parts for installing or replacing machine components.
Manufacturer and supplier will not be held responsible for spare parts from third parties.

☞ **NOTE - Programming instructions!**

Repairs require that machine components carry out their individual movements and that the machine movements are tested. These functions are controlled on level 1 of the service menu.
For the necessary instructions, please refer to the programming instructions.

Operating panel replacement:
1. Disconnect machine from power supply.
2. Remove two lock screws [2] and disconnect interface connector [3].
3. Remove retaining screws [1] from operating panel bracket.
4. Remove operating panel [5], install new panel and secure using screws.
5. Connect interface connector to receptacle [4] and secure using two lock screws [2].

Fig. 6

Fig. 6

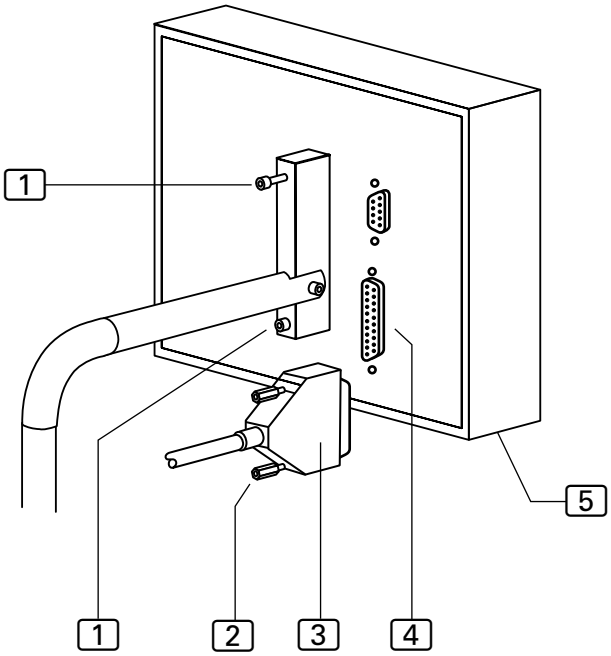

C.5 Maintenance

C.5.4 Repairs

Fig. 7/8

Clamp transport belt replacement:

1. Disconnect machine from power supply system.
2. Slide clamp to left until it reaches stop position.
3. **Fig. 8:** Remove retaining screws [3] from drive roller cover [2] and remove cover.
4. Remove two retaining screws from slide roller cover [8] and remove cover [9].
5. Loosen the two belt lock screws [4] and release belt tension [7].
6. Loosen lock nuts [6] of set screws [5] and rotate two set screws backward.
7. **Fig. 7:** Remove two connecting screws [1] from main clamp pedestal. Remove belt.
8. **Fig. 8:** Install new belt to drive roller [1] and to guide roller [10].
9. **Fig. 7:** The ends of the belt [3] are fitted with holes. Position the two ends of the belt with the belt clamp [2] exactly over the holes on the pedestal [4] and secure them using screws.

Fig. 7

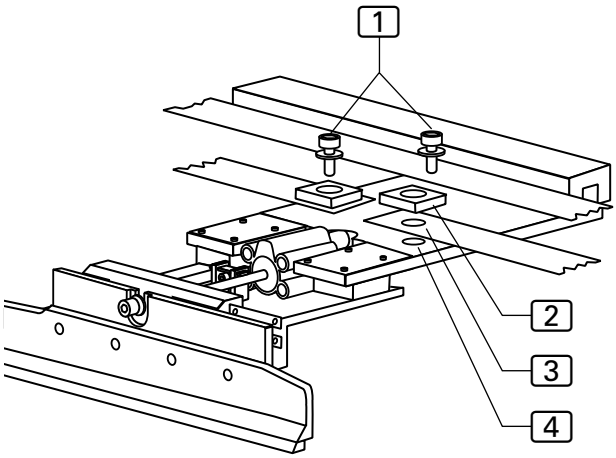

10. **Fig. 8:** Tension belt by tightening two set screws [5] until the belt can be depressed approx 10 mm with distinct counterpressure at the middle of the transport rail. Tighten lock nuts [6] and lock screws [4].
11. Install the two covers [2] and [9].

Fig. 8

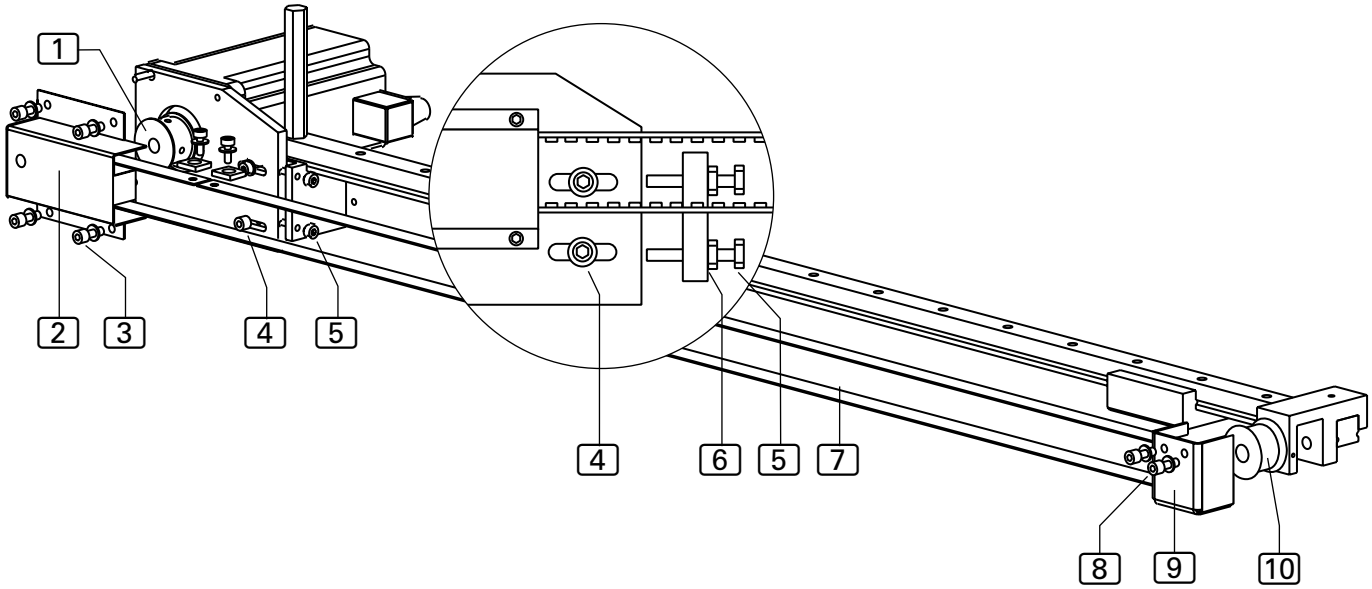

C.5 Maintenance

C.5.4 Repairs

Switch curve and initiator replacement:
To allow activation of the reversing device of the sewing drive, the toothed disk of the sewing drive must have a switch curve installed at a certain distance to an initiator (24 V PNP two-wire version).

Initiator removal:
1. Disconnect machine from power supply system.
2. Disconnect initiator connecting line connector [8] from receptacle of sewing motor control unit. The sewing motor control unit is located at the lower storage shelf of the worktable.
3. Remove lock nut [2] and rotate initiator out of the guide nut [1] of the holder [7].

Initiator installation:
1. Install lock nut [2] to initiator and install initiator into guide nut [1] of holder [7].
2. Remove retaining screws [5] from switch curve [4] on toothed disk [6]; do not remove switch curve screws.
3. Install initiator [3] at distance **A** of 1 mm from switch curve. Rotate initiator into position in guide nut [1] and secure it using lock nut [2]. The distance **B** between toothed disk [5] and initiator [3] must be 0.5 mm.
4. Connect initiator connecting line connector [8] to receptacle of sewing motor control unit.

Switch curve adjustment:
1. Turn machine on.
2. Rotate sewing head handwheel in direction of machine rotation until the thread lever reaches the highest point.
3. Then, rotate sewing head handwheel in counterdirection until the first pinning position is reached.
4. Block handwheel by depressing pinning pin of hole to the left of handwheel.
5. Rotate switch curve until initiator receives switch contact in direction of rotation exactly at switch curve.
6. Secure switch curve using two retaining screws [5].
7. Set global parameters (see programming instructions):
   For global parameter 35 (thread lever top position), set value 000.
   For global parameter 39 (thread lever reversing angle), set value 25.

Fig. 9

Fig. 9.

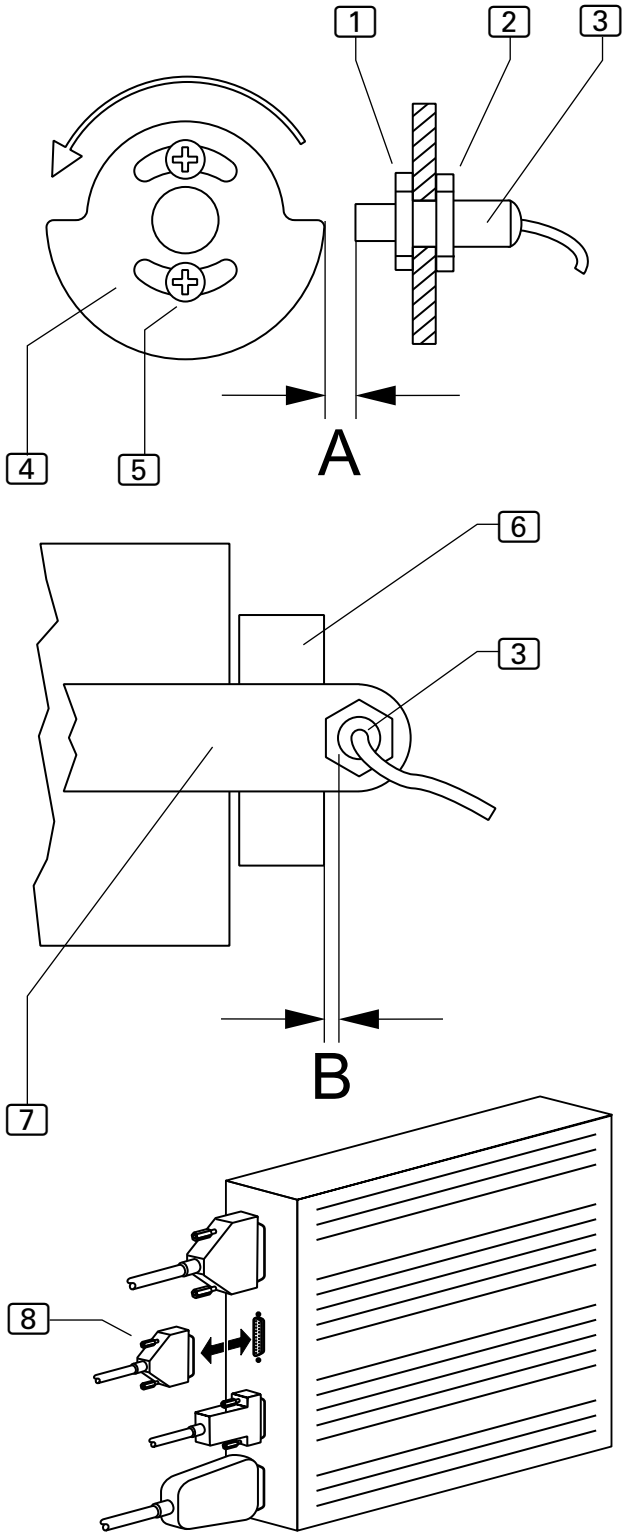

C.5 Maintenance

C.5.4 Repairs

Clamp rail replacement:
The clamp rail must be replaced if the protective lining at the bottom side of the rail is worn.

Clamp rail removal:
1. Lift main clamp.
2. **Fig. 10:** Loosen retaining screw [1] .
3. Pull clamp rail [2] down and remove.

Clamp rail installation:
1. Insert clamp rail [2] into fixture and push up until it reaches the stop. Make sure the clamp rail is positioned evenly in the fixture.
2. Tighten retaining screw [1].

Fig. 10

Fig. 10

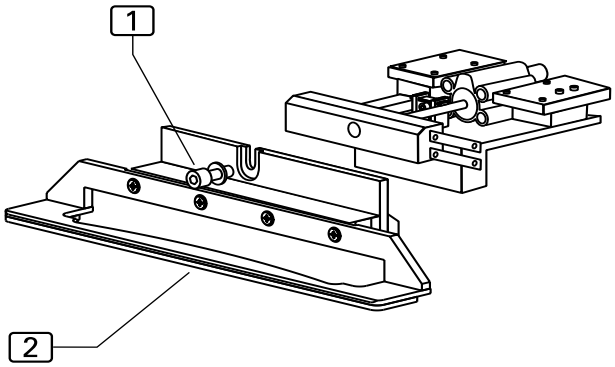

C.5 Maintenance

C.5.5 Machine set-up

NOTE - Activating inputs/outputs!

To allow for testing machine movements or interval operation, the individual stages of movement can be activated with the inputs/outputs of the machine control unit (see programming instructions, Section D.4.3., Service menu level 1).

Quick-change kit installation:
The machine is delivered with two different quick-change kits that must be installed depending on the pocket type to be sewn.
Side seam pocket kit, Sewing program M 01:
- Cloth stop with curve contour,
- Clamp rail with curve contour,
- Guide rail with curve pattern for scanning the curve contour.

Wing seam pocket kit, Sewing program M 02:
- Cloth stop straight,
- Clamp rail with straight contour.

Fig. 11: Side seam pocket kit installation:
1. The cloth stop [1] is merely placed onto the working plate, routed through the pins [2] of the knurled screws and fixed on the working plate by the magnets [4]. Push cloth stop below the cloth clamp so that the guide pins are positioned exactly in the holes [3].
2. Screw on clamp rail with curve contour [5] (see Section 5.4, Clamp rail installation/removal).
3. Install guide rail [7]: Loosen two knurled screws [6], insert guide rail into right bracket [9], then push into left bracket [8] all the way to the stop. Tighten both knurled screws.

NOTE - Safety contacts!

Both the guide rail and the main clamp are equipped with safety contacts the operate synchronously. If one of the two units is combined with an incorrect component, the machine cycle is locked, and the display shows an error message.

Fig. 11

Fig. 11

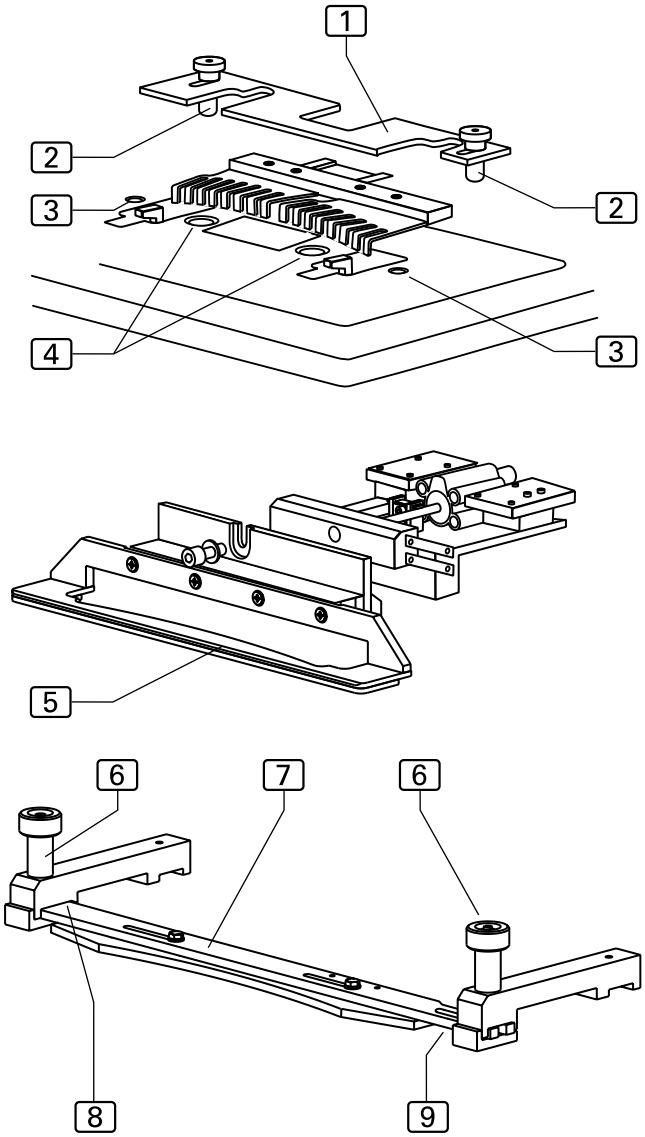

C.5 Maintenance

C.5.5 Machine set-up

Wing seam pocket kit installation:
As this seam has a straight routing, the guide rail must be removed.

1. Remove guide rail: Remove two retaining screws. Push guide rail all the way into the right bracket, remove it from left bracket, then remove it from right bracket. Retighten two retaining screws (see Fig 11).
2. **Fig. 12:** The cloth stop [1] is merely placed onto the working plate, routed through the pins [2] of the knurled screws and fixed on the working plate by the magnets [4]. Push cloth stop below the cloth clamp so that the guide pins are positioned exactly in the holes [3].
2. Screw on clamp rail with straight contour [5] (see Section 5.4, Clamp rail installation/removal).

Changing the stitch width:
The stitch width has been set at the factory to 10 mm; it can be adjusted by changing the position of the guide pins on the stop.

1. **Fig. 13:** Remove stop [4].
2. Loosen locknut [3] of knurled screw at the rear.
3. Reposition both guide pins [2] in the slot [1] until the desired width has been achieved.
4. Retighten locknuts.

☞ **NOTE - Routing of the seam!**

To ensure that the seam is routed parallel to the hem of the sewing piece, the position of the two guide pins in the slot must be absolutely identical.

☞ **NOTE - Position of the cloth clamp!**

If the stitch with is reduced drastically, the position of the cloth clamp to the stop may have to be changed to ensure that the clamp plate is not lowered onto the stop.

5. Loosen two retaining screws [5].
6. Move cloth clamp [6] to desired position.
7. Retighten retaining screws.

Fig. 12/13

Fig. 12

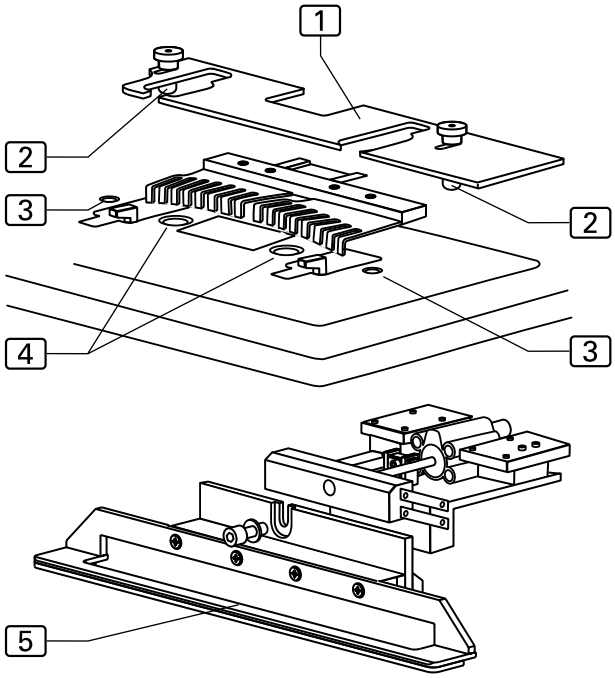

Fig. 13

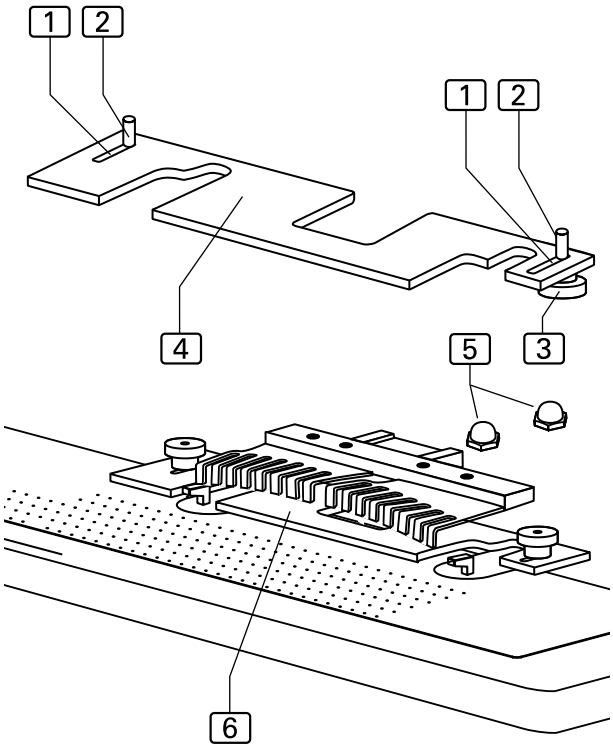

C.5 Maintenance

C.5.5 Machine set-up

After any works to the main clamp, the clamping pressure and the alignment of the clamp rail to the needle must be checked.

Clamp rail clamping pressure adjustment:

1. Check to see if the main clamp exerts pressure to the sewing piece evenly along the entire length of the rail by lining up a piece of fabric to the insertion position and lowering the main clamp.
2. Check clamping pressure by trying to pull the sewing piece out of the clamp at several locations along the clamp rail.
3. **Fig. 14:** If clamping pressure is irregular or insufficient, remove clamp rail and adjust pressure using the two adjustment screws [1] on the inner side of the clamp rail.
   Tightening the adjustment screws will increase pressure of clamp rail to working plate as the overall height **H** of the main clamp increases.
4. Repeat adjustment and recheck with lowered main clamp until clamping pressure is distributed evenly along the entire length of the clamp rail.

Clamp slide disengagement position adjustment:
Fig. 15: The disengagement position of the clamp slide [3] is adjusted at the stop of the pedestal.
The stop point determines how far the clamp slide moves toward the sewing head needle.

To set the stop point:

1. Lower main clamp.
2. Depressurize the compressed air system of the machine. Disconnect the compressed air hose of the machine from the on-site compressed air supply system.
3. Reposition main clamp manually to below the sewing head and lower needle by using the handwheel.
4. Distance **A** from the interior edge [4] of the clamp rail to the needle [5] must be 1-1.5 mm. The interior edge of the clamp rail must be exactly flush with the exterior edge of the stitch hole.
5. Loosen locknut [2] of stop screw [1] at pedestal and rotate stop screw to correct position.
6. Check distance **A**.
7. Retighten stop screw locknut.

Fig. 14/15

Fig. 14

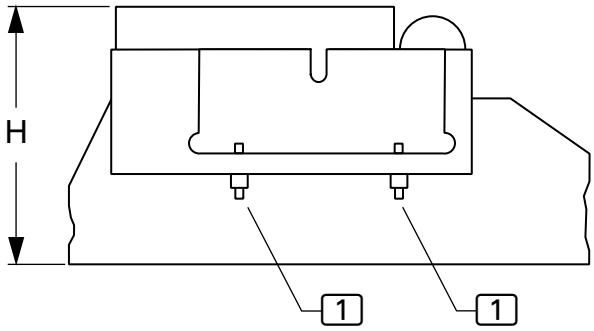

Fig. 15

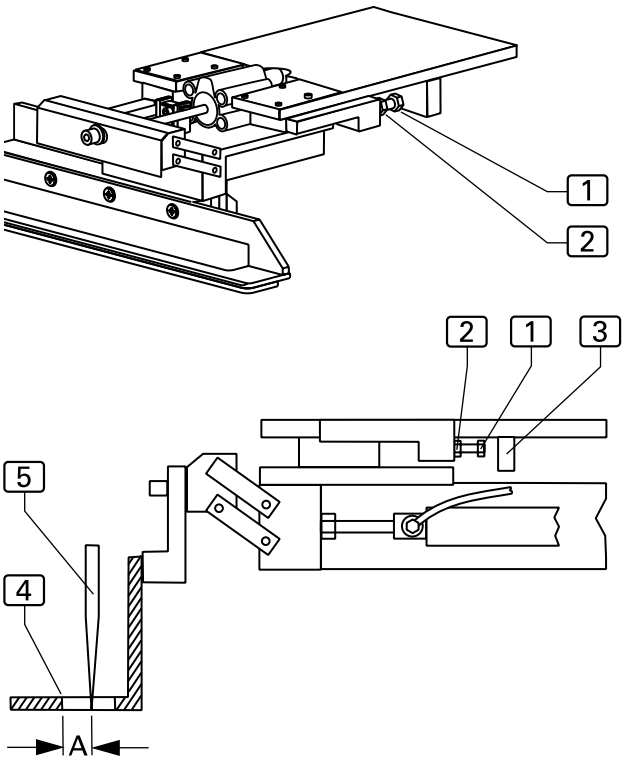

C.5 Maintenance

C.5.5 Machine set-up

Fig. 16/17

Adjusting the parallel movement of the clamp rail for wing seam pockets:

1. Check to see if the needle [2] of the sewing head is routed absolutely parallel to the interior edge [3] of the clamp rail along the entire length of the clamp rail by lowering the needle using the handwheel and sliding the main clamp below the sewing head.
2. **Fig. 16:** If the routing is not exactly parallel, loosen each of the four retaining screws [1] of the clamp support and swivel clamp rail into parallel position.
3. Retighten clamp support retaining screws and check clamp rail routing.

Adjusting the synchronization between guide rail and clamp rail for side seam pockets:

The synchronization between the clamp rail and the needle is determined by the position of the curve profile on the guide rail.

1. Lower main clamp.
2. Depressurize the compressed air system of the machine. Disconnect the compressed air hose of the machine from the on-site compressed air supply system.
3. Slowly slide main clamp manually below sewing head.
4. **Fig. 17:** The interior edge [5] of the clamp rail must be routed exactly at the exterior edge of the stitch hole [6] along the entire curve contour of the main clamp. If the traveling motion is not correct, the position of the curve profile [4] on the guide rail [3] must be changed.
5. Loosen two curve profile retaining screws [1].
6. Reposition curve profile in the slots [2] and retighten both retaining screws.
7. Recheck synchronization.
8. If synchronizationis correct, retighten both retaining screws [1].

☞ **NOTE - Parallel routing!**

Unless the needle is routed absolutely parallel to the interior edge of the clamp rail along the entire length of the clamp rail, the clamp rail support must be loosened and the clamp rail must be swiveled into the parallel position (see instructions above).

Fig. 16

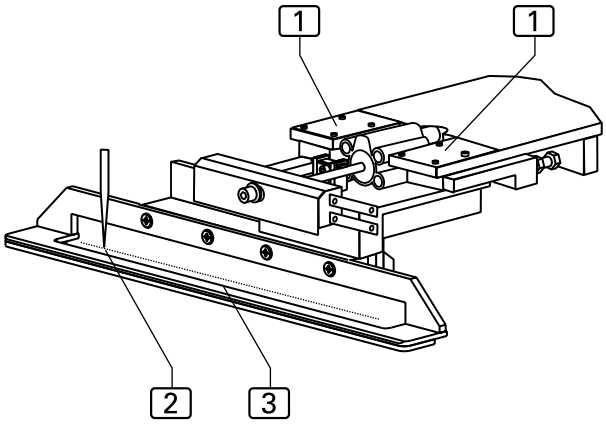

Fig. 17

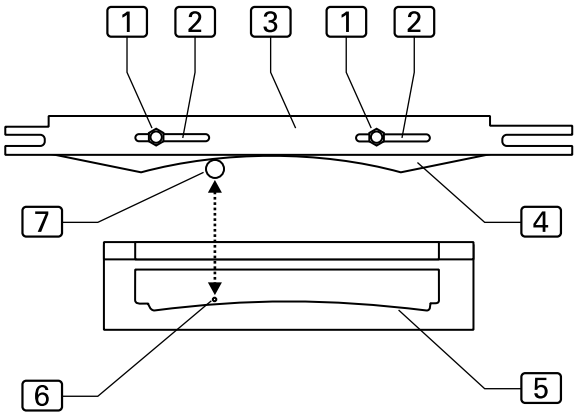

C.5 Maintenance

C.5.5 Machine set-up

Photocell light sensitivity setting:
The photocell [1] at the sewing head controls the beginning and the end of the sewing process, provided that this function has been enabled as described in Section D.4.9. The sensitivity of the photocell must be set in accordance with the sewing material used.

1. **Fig. 18:** Make sure that the light beam [2] of the photocell is not interrupted.
2. Rotate the potentiometer [7] of the light amplifier [4] fully clockwise to the stop.
3. Set the sensitivity potentiometer [8] so that the yellow LED [5] illuminates when the light beam is not interrupted (approx central position).
4. Check sensitivity. Interrupt the light beam [2] using the sewing material [3] to be used. The yellow LED [5] must go off; if not OK, set sensitivity slightly lower. Rotate sensitivity potentiometer slightly counterclockwise, then recheck setting.

NOTE - Red LED!

The red LED [6] must not illuminate in any switching state. If the red LED illuminates, the light amplifier is in a critical switching state. In this case, decrease the photocell sensitivity until the red LED goes off, then set the sensitivity in accordance with the sewing material used as described above.

Fig. 18

Fig. 18

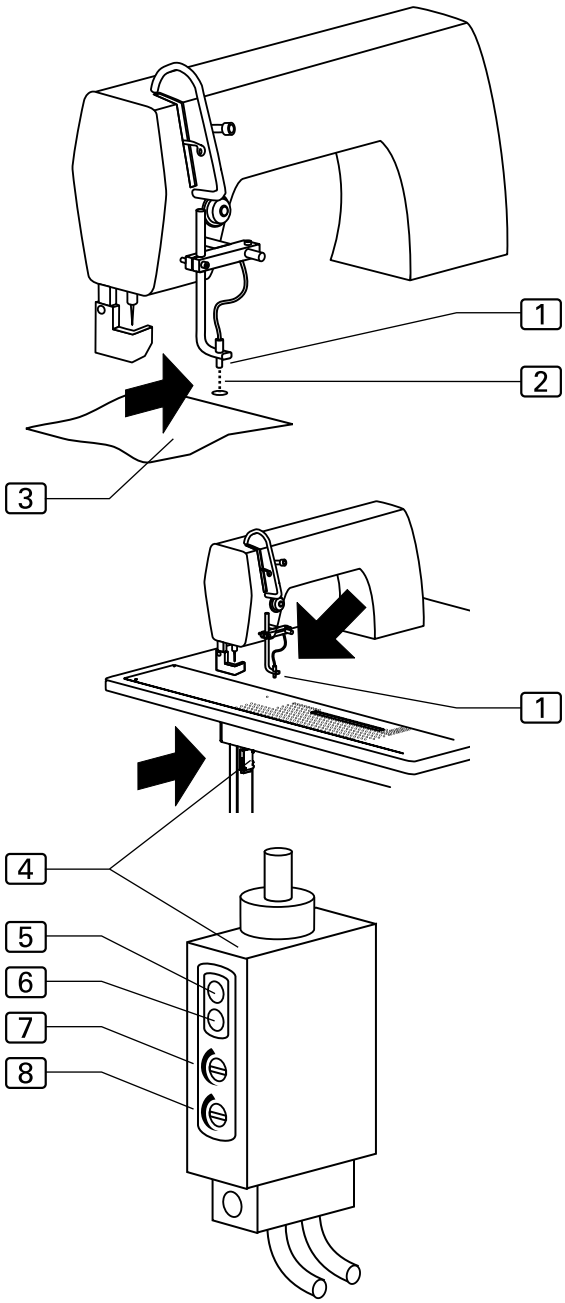

C.5 Instandhaltung

C.5.5 Machine set-up

Fig. 19/20

Photocell positioning:
The position of the photocell must ensure that the sewing piece is captured by the light beam of the photocell so that the end of the seam can be controlled by the pulse of the photocell.
The position of the photocell can be changed at two locations [1] and [2] on the support.

1. Lower main clamp.
2. Depressurize the compressed air system of the machine. Disconnect the compressed air hose of the machine from the on-site compressed air supply system.
3. Slide main clamp manually below the sewing head.
4. **Fig. 19:** Loosen retaining screws [1] and [2].
3. Position photocell so that the sensor range [4] is within the groove of the clamp rail [3].
4. Retighten retaining screws.

Photocell adjustment:
The safety photocell prevents the sewing head from sewing beyond the clamp rail groove to ensure that the needle is not damaged.

1. Lower main clamp.
2. Depressurize the compressed air system of the machine. Disconnect the compressed air hose of the machine from the on-site compressed air supply system.
3. Slide main clamp manually below the sewing head.
4. Lower needle using handwheel.
5. **Fig. 20:** Position main clamp so that distance **E** from the needle to the end of the clamp rail groove is 5 mm.
6. Cut reflective film [1] immediately below the red marking of the photocell [2] and remove film.

Fig. 19

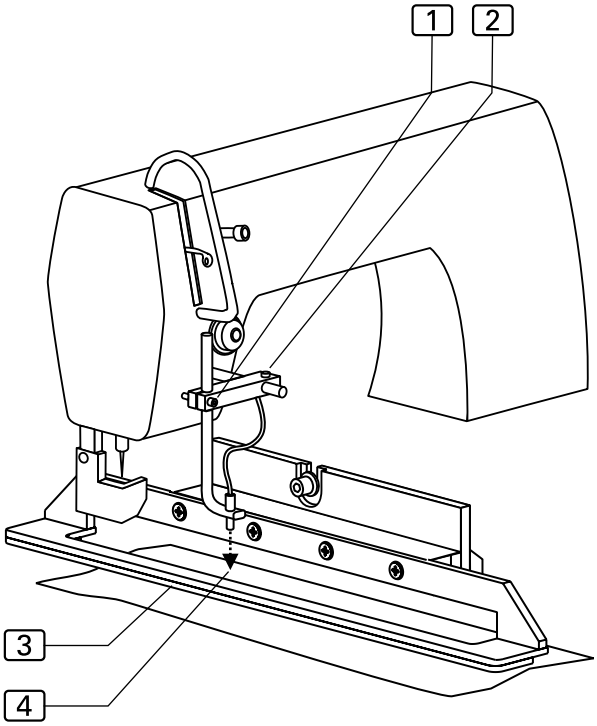

Fig. 20

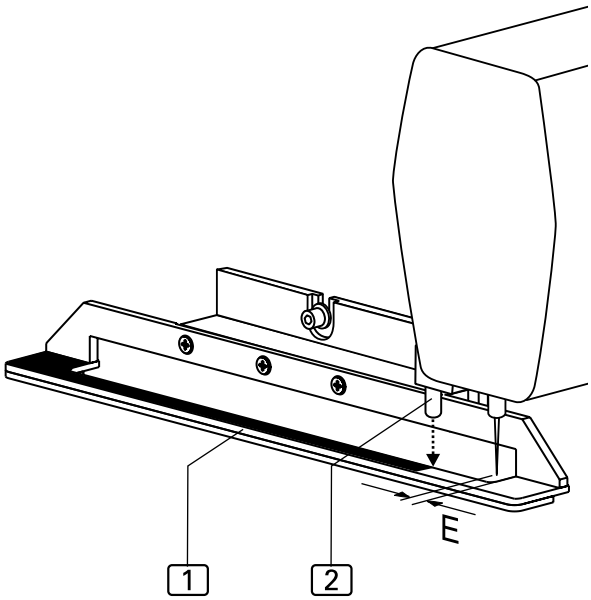

C.5 Maintenance

C.5.5 Machine set-up

Scissors installation/removal:
The scissors are integral to a block with the compressed air cylinder. The scissors blocks [4] are attached to the table plate [1] from below using an angle.

1. Pull compressed air hoses off from sleeves.
2. **Fig. 21:** Remove retaining screws [3].
3. Position new scissors block and readjust the position of the scissors to the stop in the slots [2].
4. Tighten retaining screws and connect compressed air hose.

Fig. 21

Fig. 21

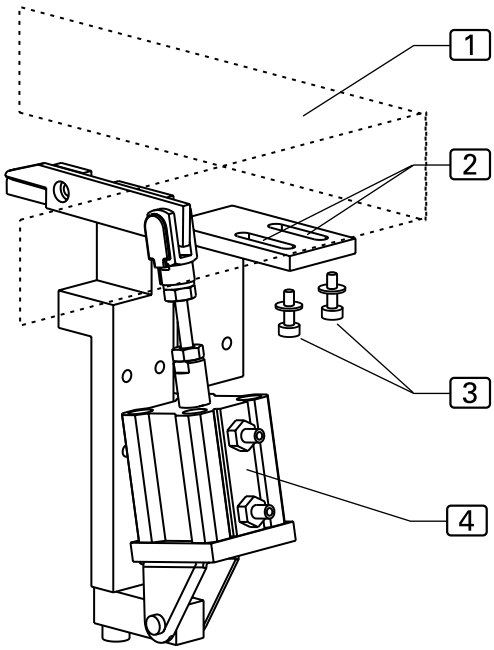

C.5 Maintenance

C.5.5 Machine set-up

Fig. 22

Adjusting the stepper motor PCB:
The PCB for controlling the stepper motor is installed in the control box.

NOTE - Machine cycle!

To prevent moving machine parts from colliding with each other or with other components when the machine is switched on again, move the machine manually into its start position before the PCB is replaced.

1. Depressurize the compressed air system of the machine. Disconnect the compressed air hose of the machine from the on-site compressed air supply system.
2. Slide main clamp into start position.

CAUTION - Damage to electrical components!

The PCB switches must not be tampered with while voltage is applied to the machine.
Otherwise, related electrical components may be damaged or become unusable!
Disconnect machine from power supply system and protect it against accidental reconnection.

Adjusting switches on the PCB:

1. Set step width:
   - using DIP switches [1] and [2],
   - micro step at hook switches [6] and [7].
2. Set current lowering using DIP switch [3].
3. DIP-switch [4] to ON.
4. Set motor phase current, rotate switch [5] to **F**.
5. Switch on supply voltage. When the PCB is adjusted correctly, the LED [8] (stand-by) is illuminated, the stand-by relay is energized.

Fig. 22

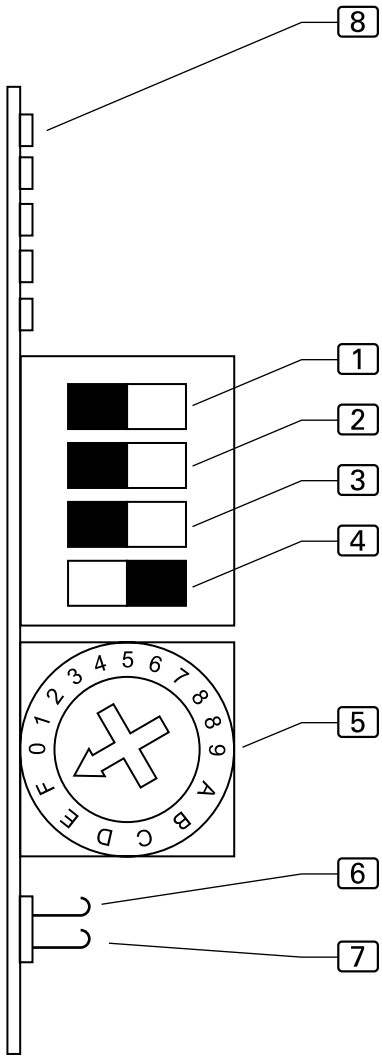

Micro step		DIP switch 1	DIP switch 2
Hook switch [6] open Signal = 0	Hook switch [7] closed Signal = 0		
Hook switch [6] closed Signal = 1	Hook switch 6 open Signal = 1		
200	2000	ON	OFF
400	4000	ON	ON
500	5000	OFF	ON
1000	100000	OFF	OFF
Signal 0 = deenergized, Signal 1 = energized			
Rotary switch position	**Phase current**	**DIP switch 3**	**Current lowering**
F	5,50 A	OFF	ON
		ON	OFF

C.6 Troubleshooting

Error 01: „Sewing program empty“	Current sewing program empty; possibly distances and routes have not been input or the entire program was erased	Insert program values manually, copy from other program or retrieve from ROM (parameter INIT)
Error 02 : „Seam not enabled“	Current sewing program not activated; number appears black on white	Press <ENT> key to activate program
Error 04 : „Clamp in wrong position“	Real value pulse from clamp motor does not correspond with nominal value	Reduce current for clamp motor to MAX clamping pressure
Error 05 : „I/O communication error“	Error transmitted between control unit and I/O module	Check connecting cable; if OK, replace control unit and/or I/O module
Error 06 : „Position not valid“	Clamp slide not positioned correctly	Check sensor connection to clamp motor; check connecting cable between adapter board 9020020 and I/O module 9020013; replace adapter board 9020020
Error 07: „No pulses from clamp motor“	No position pulse from clamp motor. If the clamp motor moved slightly, the pulses could not be processed properly. If the motor did not move, problem may be caused by control unit or clamp motor power unit	Check connection to clamp motor; replace clamp motor; replace adapter board 9020020; check condition of LEDs at power board (Berger); if required, check Berger motor; check connection to clamp motor (plug); check connection between 9020020 and power unit (plug); replace adapter board 9020020
Error 08: „Main clamp at the stopper“	Limit switch ES04 switched during clamp movement even though clamp should have been distant still	Check distance counter using test program (steps); if counter is faulty, replace clamp motor or adapter board 9020020; if counter is OK, check switch 04
Error 09: „Clamp can not leave the switch“	Clamp slide moves to limit switch during initialization but does not return (direction not reversed)	Using test program ‘Clamp motor actuation’, enter slow speed and reverse direction using arrow keys; if motor does not reverse direction, check: connection between 9020020 and power unit (plug); Berger power unit; if motor reverses direction, check limit switch ES04
Error 12: „Safety photocell not lighted“	No reflection for FZ 20 (safety)	Replace reflective film; check photocell (input)

C.6 Troubleshooting

Error 13: „Clamp position error“	Excessive difference between nominal position (step motor default) and actual position (pulse from incrimental sensor) of clamp slide; clamp slide probably blocked	Remove blocked component; check clamp slide for easy movement; check motor pinion (may be loose on shaft); tension transport belt
Error 14: „Insertion/sewing length error“	Sewing length exceeds maximum possible sewing distance; excessive insertion distance	Program sewing distance / insertion distance correctly
Error 15: „Switch for curve start“	ES12 (curve start slope) does not switch or switches too late	Check ES12 (input); check mechanical components for easy movement
Error 16: „Folder not left“	ES08 (folder at left stop) does not switch or switches too late	Check ES08 (input); check mechanical components for easy movement
Error 21: „Folder not sideways“	ES05 (clamp movement sideways) does not switch or switches too late	Check ES05 (input); check mechanical components for easy movement
Error 22: „Clamp/curve wrong“	Clamp does not correspond with curve	Clamp safety switch (ES15/16) not identical with curve safety switch (ES13/14)
Error 29: „No pulses from sewing motor“	No pulse from sewing motor after sewing process starts (sewing motor does not run)	Check sewing motor and synchronization; check connection between I/O module 9020013 and sewing motor; read both upper LEDs at 9020013: left LED illuminates briefly when needle up; right LED shows synchronization pulses (512 pulses/rotation); if no LED illuminates when handwheel is actuated, check sewing motor power supply and replace sewing motor, if required. If LEDs are OK and motor does not run before error messages, check connection between 9020020 and sewing motor, replace 9020020 or sewing motor, if required; if motor makes some stitches before error message, check connection between control unit and I/O module, replace components as required
Error 30: „Sewing motor too fast“	During thread cutting, sewing motor did not reach cutting speed within error period	Replace sewing motor or synchronizer

C.6 Troubleshooting

Error 32: „Thread position does not come“	During thread cutting, sewing motor did not reach cutting position	Input slower cutting speed and earlier cutting position; replace sewing motor or synchronizer
Error 33: „Sewing motor does not stop“	After thread cutting, sewing motor does not stop within error period	Input slower cutting speed and earlier cutting position; replace sewing motor or synchronizer
Error 34: „Needle not up“	Needle not in upper rest position; when the error message is issued, the control unit attempts once more to move the needle to the upper position	Check sewing motor and synchronizer; check connection between 9020013 and sewing motor; read condition of two upper LEDs at 9020013: if no LED illuminates when handwheel is rotated, check sewing motor power supply; replace sewing motor if required; if LEDs are OK, check connection between 9020020 and sewing motor; replace 9020020 if required
Error 35: „Thread breakage“	Thread monitor detects thread breakage	
Error 37: „Thread only rest“	The photocell at the spool case is illuminated, spool empty	If spool is not empty, the photocell is maladjusted (response too sensible); adjust correctly
Error 41: „No parts“	Photocell FZ21 remains illuminated during insertion	Adjust photocell sensibility; input test 21
Error 42: „Photocell not lighted“	Photocell FZ21 does not detect end of seam	Sewing distance too long; adjust photocell sensibility; input test 21
Error 43: „Photocell lighted too early“	Photocell FZ21 detects intermittent reflection during insertion	Adjust photocell sensibility; input test 21
Error 45 ... 48: “I/O DAC, ULN, 485, RES”	Internal hardware error during data transmission to adapter board 9020020	Replace 9020020

C.7 Specifications

Power supply

Supply voltage	230 V ±10 %, 50/60 Hz
Connection to supply	(1, N, PE) AC
Power consumption	1.3 kW
Fusing	16 A

Dimensions of the machine

Width x Depth x Height in mm	12500 x 1050 x 1640

Table height

Adjustable height in mm	790-1240

Weight

Overall weight	approx 190 kg

Compressed air

Operating pressure	6 bar
Quality	oil-free
Air consumption	16 NL

Vacuum

Displacement (minimum)	130 m³/h

Section D Programming Instructions

Section D Programming Instructions

Contents

D.1 Operating panel

D.1.1 Display and key functions

1 Display
During machine operation, the display shows the values of the selected sewing program. If menus are activated, the menu symbol or the corresponding parameters of the function are displayed.

2 Slot for memory card
The memory card is the storage medium for bakkup copies of all program control data. Programs can be copied to and stored on the memory card and loaded into the machine control unit if required.

CAUTION - Data loss!

The memory card requires permanent current from a battery to store data. If the power supply circuit is interrupted, data will be lost completely.
Do not remove battery from memory card!

- **Battery life is about 3 years; after this time, the battery must be replaced.**

3 Program stop switch
If the switch is pressed during machine operation, all machine movements and the sewing process are stopped.

4 Numeric keypad
All variable number values are entered using the numeric keypad.
The desired sewing programs are requested using the M key. The P key is used to request submenus, to confirm input and to exit the programming mode.

5 All arrow keys
Pressing the UP or DOWN arrow key will move the cursor one line up or down in the selected menu.
Pressing the LEFT or RIGHT arrow key will either mark the desired parameter in the selected menu or, if the parameter list comprises several pages, browse forward or backward.

Fig. 1

Fig. 1

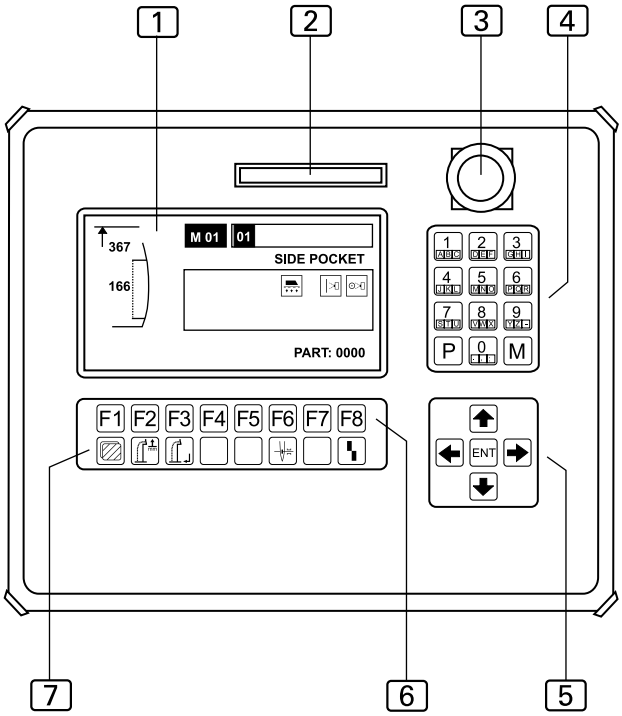

6 Function keys
The function keys are used to request the menus on the selected level for setting or changing machine functions.
Two function keys have an identical function in all selectable menus.
To move to the previous level or to the start level and to move to the next level:

Press F1 or F8 key.

7 Symbol bar
The symbol bar indicates the menus that can be requested directly from the start level using the function keys 6.
For all other menus, the corresponding symbols are shown on the operating panel display.

D.2 Fundamentals of programming

D.2.1 Program control layout

The program control is controlled using four different kinds of menus:
1. System menu,
2. Service menu,
3. Global parameter menu,
4. Special parameter menu.

System menu
The system menu is used to perform all settings for the program control operating system and for managing the sewing programs:
- Copying factory settings to the program control unit,
- Saving programmed sewing programs to the memory card,
- Copying and renaming sewing programs,
- Copying sewing programs from the memory card to the program control unit.

Service menu
The service menu is used to directly request service functions. These functions support machine set-up or other works required during machine operation, e.g. resetting the day counter or winding the bottom thread.

Global parameter menu
This menu is used exclusively for setting the global parameters, i.e. parameters that control the basic functions of the machine. Changing global parameters will result in changes of all stored sewing programs (e.g. time for blowing off a finished sewing piece using compressed air).

Special parameter menu
Special parameters are settings that refer only to one particular sewing program. Changing a special parameter will affect only the currently selected sewing program for which a setting is made (e.g. stitch length of a seam).
The special parameter menu consists of several submenus.
Special parameters can be functions that are enabled or disabled as required or parameter values that are set in lists.

Sewing program
A sewing program controls the entire machine operation during production:
- transport of the sewing piece to the sewing head,
- tucking of a seam and
- ejection of the sewing piece.

A sewing program is determined by two different kinds of values:
- global parameters,
- special parameters.

Sewing programs can be copied or renamed.

Seam number
Each sewing program can be executed with up to four seams of different stitch widths. The seams are assigned to the sewing program by seam numbers (01, 02, 03, 04).

Combination of sewing program and seam number
A sewing prgram can be combined with one seam, with several seams or with all four seams.
If a sewing program with several seam numbers is requested, the seams are effected in the sequence of the seam numbers from left to right.
The sequence of the seam number is freely selectable.

Memory
Sewing programs are stored in the memory (**M**).
The program control memory can contain up to 50 sewing programs (**M 01-M 50**) with up to four seams (**01, 02, 03, 04**) each.
All sewing programs stored in the memory can be copied to the memory card (backup copies).

Creating sewing programs
Basically, it is possible to create entirely new sewing programs; however, it is easier to:
- copy a factory-programmed sewing program to an unused location in the memory and to modify this program,
- copy an already modified sewing program to an unused location in the memory and to adapt it further in accordance with the intended purpose.

D.2 Fundamentals of programming

D.2.1 Program control layout

Factory setting
Fig. 2: The program control of the machine is delivered with two factory-installed standard programs:
- [1] Sewing program **M 01** with seam 01 for the automated presewing of side seam pockets.
- [2] Sewing program **M 02** with seam 02 for the automated presewing of wing seam pockets.

Access to menus
The following menus are freely accessible:
- Service menu,
- Global parameter menu,
- Special parameter menu.

Except for three submenu pages, the entire system menu is controlled by access privileges. These privileges protect the system menu from unauthorized access. Data cannot be entered and the system menu cannot be modified unless the service code has been entered. This code is contained in the documentation delivered with the machine.

Menu level structure
The program control is divided into six menu levels (start level and levels 1-5).
The **system menu** is requested from the start level. The remaining operator prompting is achieved with plain text in the submenus.
The **service menus** are requested directly from the start level and from level 1.
The **global parameter menu** is requested from level 1, the parameters pertaining to the menu are selected and changed in a list.
The **special parameter menu** is requested from level 1 and is edited in four other levels (levels 2-5) and in the pertaining parameter lists.

CAUTION - Damage to machine!

Some of the menu entries start machine units or a machine cycle.
This may damage machine components if the machine is not ready for operation.
Do not enter data unless the machine is ready for operation.

Fig. 2

Fig. 2

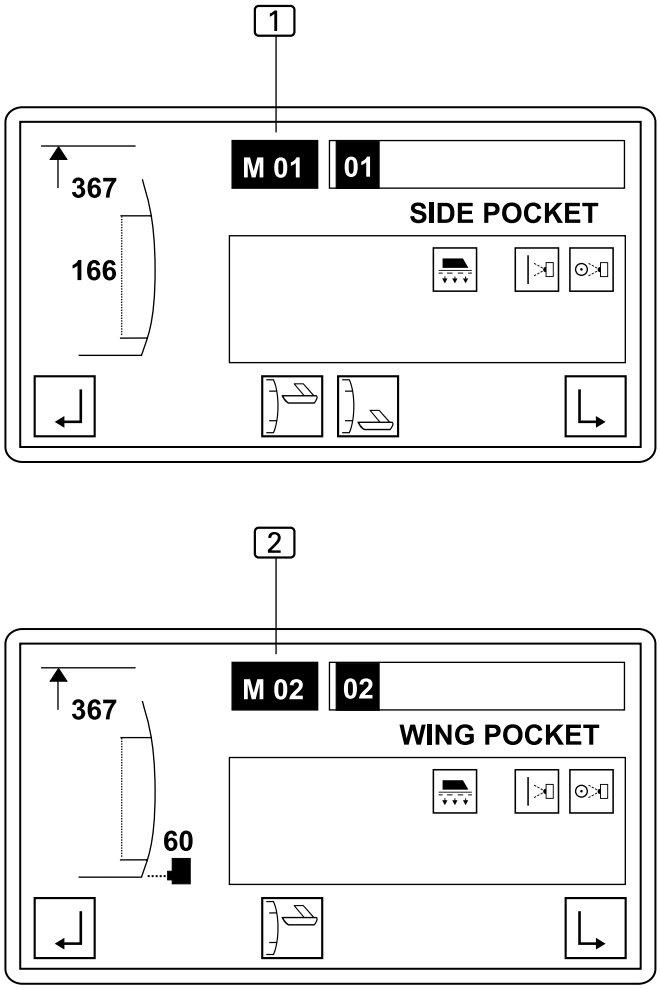

D.2 Fundamentals of programming

D.2.2 Programming level overview

Fig. 3

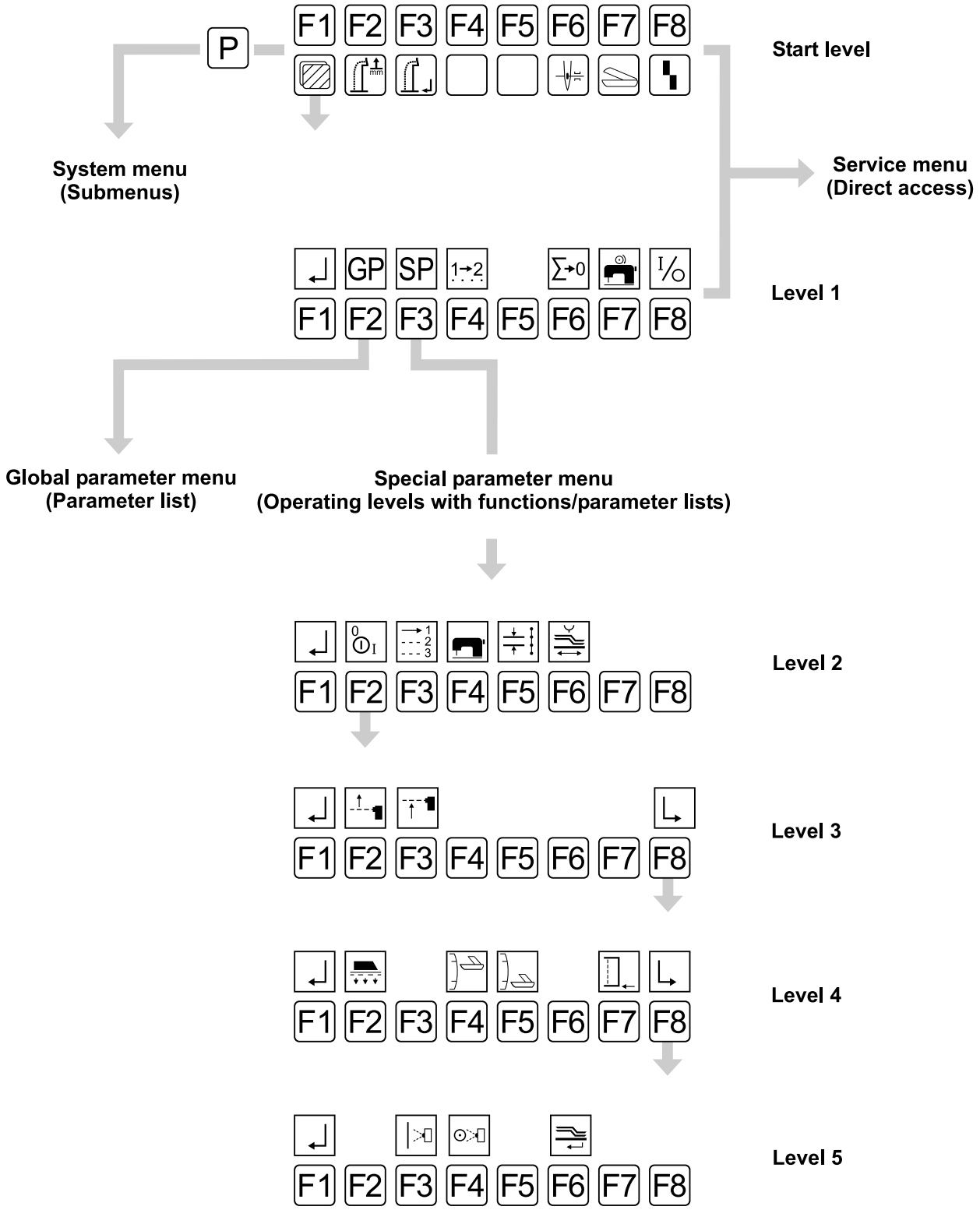

D.3 Programming

D.3.1 System menu

The system menu is divided into several submenus. The submenus themselves are divided into access-protected and open submenus. Access is protected by the **service code**.

Open submenus
Open submenus are freely accessible from the start menu:
- Enter service code
- Clamp motor step test
- Display total piece counter

Access-protected submenus
Access-protected submenus can only be opened after the service code has been entered:
- Eprom seam parameters
- Copy seam numbers
- Erase seam
- Enter seam name
- Copy sewing program to memory card
- Load sewing program from memory card
- Copy variables (global parameters/special parameters) to memory card
- Load variables (global parameters/special parameters) from memory card
- Run clamp motor in permanent test
- Test thread cutter
- Test stacker
- Enter mechanic code

NOTE - System menu control!

The submenus of the system menu are requested and exited using the same keys. Exceptions from this rule are indicated by plain text in the corresponding menu.
Request the system menu from the start level:

- Press P key.

Confirm input and exit the system menu:

- Press P key.

NOTE - Submenu levels!

All input for the system menus must be started from the submenu level 1.
To change to the submenu level 1:

- Press ← key.

The submenus of the system menu can be requested using either the arrow keys or the function keys.

NOTE - RESET!

As a rule, a RESET should be performed in the system menu after settings have been changed to reset the machine to its start position.

- Press **program stop key**, then unlock key.

■ **Entering the service code:**
Entering the service code allows access to the access-protected submenus of the system menu.

- Press F4 key (service code).
- Enter service code numbers using the numeric keypad. The code is: 50190

■ **Testing clamp motor steps:**
This diagnostic function is used to test the function of the clamp motor sensor interface.

- Press F3 key (diagnostics).
- Press F2 key (clamp transport).
- Press F1 key (clamp motor steps).

Move clamp by hand. If the numeric value (mm) changes, the sensor is operational.

D.3 Programming

D.3.1 System menu

■ **Displaying total piece counter:**
With this counter, the total number of finished pieces can be displayed. The counter cannot be reset.

- Press F5 key (additional programs).
- Press F4 key (piece counter).

The number of pieces : nnnnnnnn is displayed.

■ **Eprom seam parameters:**
Use this function to copy the factory-programmed fixed seams from the Eprom back to the sewing program.

- Press F1 key (init parameters).
- Press F2 key (Eprom seam parameters).
- Enter seam number using numeric keypad.

■ **Copying seam numbers:**
Use this function to copy a factory-programmed fixed seam to a different seam number.

Request sewing program and mark desired seam number.

- Press F1 key (init parameters).
- Press F3 key (copy seam number).
- Enter seam number using numeric keypad.

■ **Erasing seams:**
This function is used to erase a seam from a sewing program.

Request sewing program.

- Press F1 key (init parameters).
- Press F4 key (erase seam).
- Enter seam number using numeric keypad.

Confirm safety prompt:

- Press ENT key.

■ **Entering seam names:**
A sewing program can be named using plain text.

Request sewing program.

- Press F1 key (init parameters).
- Press F5 key (enter seam name).
- Use the numeric keypad to enter numbers or text. To enter letters, hold the required color-coded function key depressed and press the corresponding color-coded number key for the letter on the numeric keypad. To enter blanks between text or number combinations, press the LEFT or RIGHT arrow key.

D.3 Programming

D.3.1 System menu

■ **Copying sewing programs to the memory card:**
Programmed sewing programs can be copied to the memory card (backup copies).

Select sewing program.
- Insert memory card into slot until stop.
- Press [P] key.
- Press [F2] key (memory card).
- Press [F1] key (current program --> card).
- Enter seam number using numeric keypad.

■ **Loading sewing programs from the memory card:**
To reestablish or to change seams, sewing programs can be loaded from the memory card by overwriting an existing sewing program or selecting an unused location.

- Insert memory card into slot until stop.
- Press [F2] key (current seam --> card).
- Enter sewing program and seam number using numeric keypad.

Confirm input , exit menu:

- Press [P] key.

■ **Copying variables to the memory card:**
All variables (global parameters/special parameters) can be stored on the memory card (backup copies).

- Insert memory card into slot until stop.
- Press [F2] key (memory card).
- Press [F3] key (all variables --> card).

Confirm safety prompt.

- Press [ENT] key.

■ **Loading variables from the memory card:**
All variables (global parameters/special parameters) can be downloaded from the memory card to the program control memory to reestablish the machine configuration.

- Insert memory card into slot until stop.
- Press [F2] key (memory card).
- Press [F4] key (card --> all variables).

Confirm safety prompt.

- Press [ENT] key.

☞ **NOTE - Current configuration!**

If this function is used to download all variables from the memory card to the program control, all current sewing programs will be overwritten.

D.3 Programming

D.3.1 System menu

■ **Running clamp motor in permanent test:**
The clamp motor can be run permanently to check for constant machine movement.

- Press F3 key (diagnostics).
- Press F2 key (clamp transport).
- Press F3 key (clamp motor permanent test).

Confirm safety prompt.

Press ENT key.

The clamp motor runs permanently until it is stopped. To stop the motor:

- Press **program stop switch** and unlock switch.

■ **Testing the thread cutter:**
By entering a three-digit value, you can determine when the thread cutter is activated. The input must be checked for a machine cycle and corrected if required.

- Press F3 key (diagnostics).
- Press F3 key (sewing motor).
- Press F2 key (thread cutter).
- Enter value using numeric keypad.

Start or stop machine cycle.

- Press 0 key.

■ **Entering mechanic code:**
Service personnel can enter an individual code that protects the system menu submenus from unauthorized access.

- Press F5 key (additional programs).
- Press F1 key (mechanic code).
- Enter code using numeric keypad. The code may consist of letters or numbers or of a combination of both. To enter letters, hold the required color-coded function key depressed and press the corresponding color-coded number key for the letter on the numeric keypad.

D.3 Programming

D.3.2 Service menu start level

The service functions of the service menu are requested by direct access from the start level or from level 1. Service functions support the working process during machine production.

Functions on the start level
The function keys on the start level are assigned to the symbols below them. These symbols cannot be changed; they are always visible.

F1 Request service menu level 1
F2 Photocell correction for sewing piece pick-up, insertion distance length.
F3 Change fixed seam end point, photocell correction for end of seam.
F6 Actuate thread clamp manually
F7 Test cutters manually
F8 Reset insertion process

■ **Request service menu level 1:**

- Press F1 key.

■ **Photocell correction for sewing piece pick-up, insertion distance length:**
The setting refers to the marked seam.
With sewing program **M 01**, the sewing piece is lined up at the stop rail. The beginning of the seam is determined by a fixed length of the insertion distance.

- Press F2 key.

The cursor automatically marks the changeable value.
To change this value gradually:

- Press ← or → key.

To enter a completely new numeric value:

- Enter numbers using numeric keypad.

Confirm input and exit menu:

- Press P key.

☞ **NOTE - Check settings!**

The settings must be checked using a sewing piece; if required, they must be corrected.

■ **Changing the fixed end of seam point, photocell correction for end of seam:**
The setting refers to the marked seam.
With sewing program **M 01,** the end of the seam is controlled by entering a **fixed seam distance** (length of the desired seam, start tick to end tick). The photocell is automatically deactivated.
With sewing program **M 02**, the end of the seam is determined by photocell scanning. The setting varies the length of the seam distance by which sewing continues after the scan point of the photocell.

- Press F3 key.

The cursor automatically marks the changeable value.
To change this value gradually:

- Press ← or → key.

To enter a completely new numeric value:

- Enter numbers using numeric keypad.

Confirm input and exit menu:

- Press P key.

D.3 Programming

D.3.2 Service menu start level

NOTE - Check settings!

The settings must be checked using a sewing piece; if required, they must be corrected.

■ Manual actuation of the thread clamp:

After the top thread has been passed through the needle, the thread clamp is actuated manually to protect the top thread from being pulled out of the needle when a machine cycle starts.

- Press F6 key.

■ Manual testing of the cutters

Sharpness and function of the two cutters can be chekked individually. When the corresponding function key is pressed, a cutting movement is performed.

1. Request the cutter test menu.

- Press F7 key.

The display shows the symbols of the selectable functions on this level.

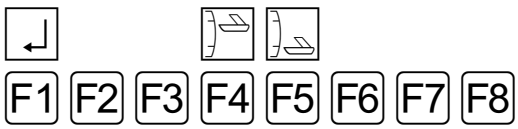

2. Left cutter.

- Press F4 key.

3. Right cutter.

- Press F5 key.

■ Resetting the insertion process:

This function depends on the mode of machine operation. It refers only to machine movements that can be performed before the automatic operation.
The machine movements can be reset gradually.

- Press F8 key (several times if required).

D.3 Programming

D.3.3 Service menu level 1

Functions on level 1
The function keys on the level 1 are assigned to the symbols above them as shown on the display.
The settings of the global parameter menu (GP) and of the special parameter menu (SP) which can also be requested from this level are described in separate sections.

F1 Back to start level
F4 Set seam sequence
F6 Reset day counter to zero
F7 Manual winding
F8 Select machine control inputs / outputs

■ **Setting the seam sequence:**
The setting refers to the selected sewing program. The sequence for sewing the seams can be freely selected. When the sequence is set, existing seam numbers are overwritten or new seam numbers are written.

- Press F4 key.

The display shows the marking of the sewing program and the seam numbers.

01 **01** 02 03 04

Mark seam number to be changed using cursor:

01 01 **02** 03 04

Open "Overwrite" function:

- Press ENT key.

Enter new seam number using numeric keypad:

01 01 **04** 03 04

D.3.3 Service menu level 1

Confirm input and exit menu:

- Press P key.

The display shows the new seam sequence.

01 **01** 04 03 04

Erase seam number:

- Mark seam number using cursor, then erase:
- Press M key.

Confirm erasure and exit menu:

- Press P key.

☞ **NOTE - Seam sequences!**

Just as the seam sequence can be freely selected, a seam can be written into a sewing program once or several times. A sewing program may consist of up to six seams.

■ **Resetting the day counter to zero:**
This function is used to reset the day counter for a production cycle to zero.

- Press F6 key.

The display counter is now reset to zero.
Display: PART: 0000

D.3 Programming

D.3.3 Service menu level 1

■ **Manual winding:**
This function is used to wind thread from the thread spool to the bottom thread spool. To start the function:

- Press F4 key.
- To exit, press any key.

☞ **NOTE - Remove top thread!**

The top thread must be removed up to the thread lever to protect the top thread and the bottom thread from being entangled.

■ **Selecting machine control inputs / outputs:**
This menu is used for troubleshooting and for a manual testing of machine operation settings.
The outputs (OUT) can be selected and tested separately. The corresponding inputs (INP) are displayed for an active output. Additionally, the selected output can be switched intermittently.

Activated inputs/outputs are marked with highlighted numbers.

01	02	03	04	05	06	07	08	09	10
11	12	13	14	**15**	16	17	18	19	20
21	22	23	24	25	26	27	28	29	30
31	32	33	34	35	36	37	38	39	40
41	42	43	44	45	46	47	48	49	50
51	52	53	54	55	56	57	58	59	60

☞ **NOTE - Machine movements!**

If outputs are activated, the machine performs the corresponding functions. Before activating the outputs, remove all unnecessary objects within the operating range of the machine.

Select output:

- Press F8 key.

Select number line:

- Press ↑ or ↓ key.

Mark output number by moving the corresponding function number using the cursor. The cursor now has the shape of an arrow.

- Press ← or → key.

Activate output:

- Press ENT key.

The function number is highlighted in black. The output is active.

Deactivate output:

- Press ENT key.

Switch output to intermittent operation:

- Mark function number using cursor.
- Press ENT key for approx 3 seconds.

The function number is highlighted in black and flashes. The output is active intermittently.

Switch off intermittent operation of output:

- Press ENT key.

The function number is highlighted in black again. The output is still active.

Deactivate output:

- Press ENT key.

D.3 Programming

D.3.4 List of outputs and inputs

Outputs						
Valve	**Output number**			**Cylinder number**	**Signal output**	**Valve type**
Y01	01	Open / close clamp		01	X25 Pin02	5/2 way
Y02	02	Move clamp in / out sideways		02	X25 Pin03	5/2 way
Y10	10	Thread clamp forward / rearward		10	X26 Pin18	5/2 way
Y11	11	Blow thread in			X26 Pin18	5/2 way
Y12	12	Cutter left		12	X25 Pin01	5/2 way
Y15	14	Cutter right		14	X25 Pin14	5/2 way
Y15	15	Vacuum on / off		15	X25 Pin01	5/2 way
Y20	20	Fabric clamp forward / rearward		20	X25 Pin10	5/2 way
Y21	21	Open / close fabric clamp		21	X25 Pin09	5/2 way
Y31	31	Thread cutter		31	X25 Pin10	3/2 way
Y32	32	Blow pulse at rest thread monitor			X26 Pin29	3/2 way
Y36	36	Thread tension blowing		36	X25 Pin04	3/2 way
Y39	39	Clamp stop		39		3/2way
Y47	47	Blow pieces off		47	X25 Pin27	3/2 way

Inputs						
Switch	**Input number**		**Switch type**		**Signal input**	
S01	01	Start switch	Footswitch	Make	X24 Pin01	
S04	04	Clamp reference point	Initiator NPN	Break	X24 Pin03	
S05	05	Move clamp sideways	Initiator NPN	Make	X24 Pin10	
S11	11	Curve start clamp	Initiator NPN	Make	X24 Pin06	
S12	12	Curve start slope	Initiator NPN	Make	X24 Pin11	
S19		Sewing drive needle up	Initiator NPN	Make	Stecker Efka	
S20	20	Safety photocell	Photocell NPN		X24 Pin12	
S21	21	Slash length photocell / scanning	Photocell NPN		X24 Pin13	
S23	23	Top thread monitor	Probe		X24 Pin15	
S25	25	Spool rest thread monitor (lock stitch)	Photocell NPN		X24 Pin17	

D.3 Programming

D.3.5 Global parameters

Global parameters are values that control the basic functions of the machine. If global parameters are changed, this change affects all stored sewing programs.

■ **Requesting / exiting the global parameter menu:**
The minimum and maximum input values are limited by the program control unit. Values that are not within the limits will not be accepted but reduced to the corresponding minimum or maximum value.

Change from start level to level 1:

- Press F1 key.

Request global parameter menu:

- Press GP key.

Browse through list:

- Press ← or → key.

Move to line in list:

- Press ↑ or ↓ key.

Change parameters:

- Press ENT key.
- Insert new value using numeric keypad or
- Press ← or → key.

Confirm input:

- Press ENT key.

Exit menu:

- Press P key.

D.3 Programming

D.3.5 Global parameters

No.	Programmable global parameters (F2)
01	TILL CLAMP SIDEWAYS FWD: Scanning and piece pick-up after clamp movement forward / time interval
02	TILL CLAMP DOWN .....: Lower clamp after clamp movement forward for piece pick-up / time interval
03	TILL VACUUM OFF .....: Vacuum off after clamp down / time interval
05	TILL CLAMP INSERTING: Clamp insertion delay / time delay
06	SEWING END ->CL.SIDEW.: Clamp movement rearward sideways after sewing drive off / time interval
07	TIME AFTER CLAMP OPEN: Clamp movement right to programmed position after clamp up / time interval
17	TILL TENSION OPEN ....: Tension blowing on after end of seam / time interval
18	DURATION OF TENS. OPEN: ON duration for tension blowing
19	TILL THREAD CLAMP FORW.: Time until thread clamp forward and blowing on after clamp up / time interval
20	DUR.THREAD CLAMP FORW.: Duration of blowing and thread clamp forward
32	BLOW OUT THE PART ....: Blow off sewing pieces / duration
34	HOLDING STAMP DOWN: Time until holding stamp down after vacuum on / time interval
35	THREAD CATCH. "UP" POS: Thread lever in top position / duration
36	SWITCH ON POS.OF TRIMM.: Switch-on position for thread cutting: Input value of 01-255
37	TRIMMING SPEED .....: Speed during thread cutting
38	DURATION OF TRIMMING: ON duration for thread cutting
39	THREAD CATCH.TURNS BACK: Thread lever reversing angle
40	PROCESS IN STEPS .....: Gradual machine cycle

D.3 Programming

D.3.6 List of special parameters

Special parameters are values that refer to only one specific sewing program. Changes of these values affect only the currently selected sewing program for which the setting is made.
Special parameters are edited in four different levels (level 2 to level 5).
Special parameters can be functions that may be enabled or disabled or parameter values that are set in lists.

■ **Request / exit special parameter menu:**
Select sewing program and change from start level to level 1:

- Press key.

Request special parameter menu:

- Press SP key and request submenu.

Exit menu:

- Press P key.

No.	Programmable special parameters in list (F2)
01	CLAMP POSITION RIGHT: Clamp position right during piece transfer (must be programmed for 1912)
03	INSERT SPEED .....: Clamp insertion speed
04	CLAMP SPEED .....: Clamp transport speed
06	SEWING SPEED 1 .....: Sewing speed 1 (beginning of seam)
07	SEWING SPEED 2 .....: Sewing speed 2 (main seam)
08	SEWING SPEED 3 .....: Sewing speed 3 (end of seam)
09	DISTANCE SEWING SPEED 1: Distance for slow sewing (sewing speed 1)
10	DISTANCE SEWING SPEED 3: Distance for slow sewing at end of seam (sewing speed 3)
12	THREAD MONITOR ON AFTER: Top thread monitor on (distance in mm after beginning of sewing process)
13	TOP THREAD MON. FILTER: Filter for top thread monitor (response delay)
15	BOTTOM THREAD MON. FILTER: Filter for bottom thread monitor (response delay)
16	TACKING LENGTH SEAM BEG: Initial bar tack length (only lock stitch)
17	TACKING LENGTH SEAM END: Final bar tack length (only lock stitch)
18	STITCH LENGTH SEAM BEG: Stitch length at beginning of seam (Input 5.0 mm max.)
19	DISTANCE OF THIS ST.LEN: Distance of stitch length at beginning of seam

D.3 Programming

D.3.6 List of special parameters

No.	Programmable special parameters in list (F2)
20	1.ST.LENGTH OF CURVE: First stitch length in curvature (Input 5.0 mm max.)
21	DIST.OF 1.STICH LENGTH: Distance of first stitch length
22	2.ST.LENGTH OF CURVE: Second stitch length in curvature (Input 5.0 mm max.)
23	DIST.OF 2.STITCH LENGTH: Distance of second stitch length
24	ST.LENGTH OF MAIN SEAM: Stitch length of main seam (Input 5.0 mm max.)
25	STITCH LENGTH SEAM END: Stitch length at end of seam (Input 5.0 mm max.)
26	DIST.OF THIS ST.LENGTH: Distance of stitch length at end of seam
27	T.LENGTH TRIMM.STITCH: Stitch length of cutting stitch (Input 5.0 mm max.)
28	CHOICE OF TRIMMING ST.: Cutting stitch / Preselection
30	START MODUS .....: Start mode preselection
32	BLOWING MODUS .....: Blowing, mode

D.3 Programming

D.3.7 Level 2 special parameters / Functions

Fig. 4/5

Functions of level 2 submenus
The following section describes the special parameters that can be enabled or disabled as functions.

F1 Back to start level
F2 Enable / disable functions

■ **Enabling / disabling functions:**
Functions can be enabled or disabled for a selected sewing program. This process covers three levels (3, 4 and 5). The changes made are reflected on the display:

Fig. 4: Enabled functions are displayed as symbols 1 and 2.

Fig. 5: Disabled functions are removed from the sewing pictograph 1 and from the inner section 2 of the display.

Start menu:

- Press F2 key.

Level 3 is displayed.

Level 3 submenus

F1 Back to start level
F2 Switch photocell for beginning of seam on or off
F3 Switch photocell for end of seam on or off
F8 Request next level (level 4)

Fig. 4

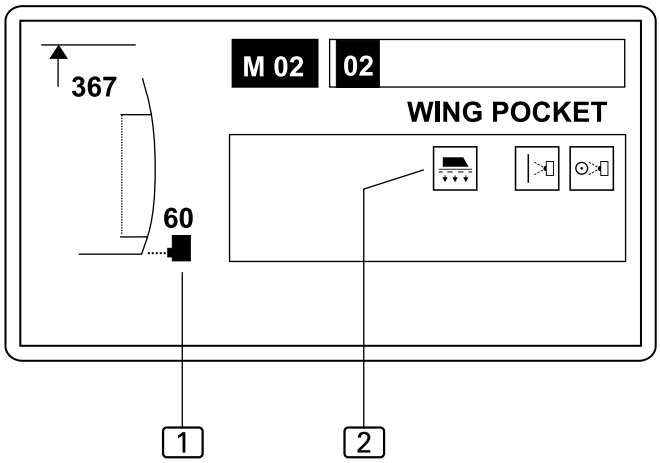

Fig. 5

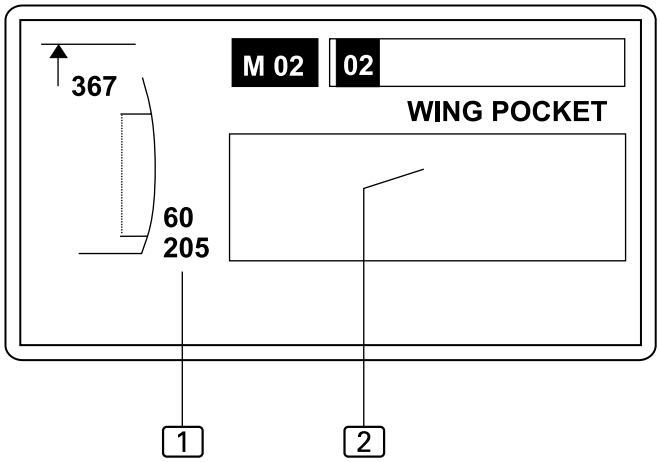

D.3 Programming

D.3.8 Level 3 special parameters / Functions

■ **Switching photocell for beginning of seam on or off:**

If the photocell that scans the start position of the seam is switched off, the machine control requires a fixed insertion distance for machine operation. Therefore, switching off the photocell results in a switch-over to a fixed insertion length (see Fig. 5). This function is directly related to the photocell correction functions of the service menu.

- Press F2 key.

The alternating request of this function switches between two modes:
Photocell for beginning of seam and fixed insertion distance.

■ **Switching photocell for end of seam on or off:**

If the photocell that scans the end position of the seam is switched off, the machine control requires a fixed point for the end of the seam to ensure correct machine operation. Therefore, switching off the photocell results in a switch-over to a fixed end of seam point. This function is directly related to the photocell correction functions of the service menu.

- Press F2 key.

The alternating request of this function switches between two modes:
Photocell for end of seam and fixed end of seam point.
This function can only be enabled if the function "sewing to fixed end of seam point" (level 4) is disabled.

D.3.9 Level 4 special parameters / Functions

Functions of level 4 submenus

F1 Back to level 3
F2 Switch vacuum on or off
F4 Cutter left
F5 Cutter right
F7 Switch sewing to fixed end of seam point on or off
F8 Request next level (level 5)

■ **Switching vacuum supply on or off:**

The vacuum used to fix the sewing piece before it is transferred to the clamp transport can be switched off while machine movements are checked. To switch the vacuum on or off:

- Press F2 key.

☞ **NOTE - Operation without vacuum!**

During normal production, the vacuum supply should always be switched on as otherwise machine operation may be impaired.

■ **Disabling the left scissors:**

The left scissors can be disabled if the machine cycle does not require a start tick.

- Press F4 key.

D.3 Programming

D.3.9 Level 4 special parameters / Functions

■ **Disabling the right scissors:**
The right scissors can be disabled if the machine cycle does not require an end tick.

- Press F4 key.

☞ **NOTE - Sewing program M 02!**

If sewing program M 02 (wing seam pocket) has been requested, the right scissors is automatically disabled.

■ **Switching sewing to fixed end of seam point on or off:**
If this function is enabled, the sewing program is set for a fixed end of seam point. In this case the function "photocell for end of seam" (level 3) is disabled.

- Press F7 key.

D.3 Programming

D.3.10 Level 5 special parameters / Functions

Functions of level 5 submenus

F1 Back to level 4
F3 Switch top thread monitor on or off
F4 Switch rest thread monitor for lock stitch upper part or bottom thread monitor for chain stitch upper part on or off
F6 Clamp position after end of seam

■ Switching the top thread monitor on or off:

For testing purposes, the top thread monitor can be switched off. To switch the top thread monitor on or off:

- Press  F3 key.

NOTE - Operation without top thread monitor!

During normal production, the top thread monitor should always be switched on as otherwise the sewing programm will not be stopped if the thread breaks.

■ Switching the rest thread monitor or bottom thread monitor on or off:

Depending on the specifications of the sewing head, the machine is equipped with either a rest thread monitor (for lock stitch upper part) or a bottom thread monitor (for chain stitch upper part). Both monitors can be switched on or off for testing purposes. To switch a monitor on or off:

- Press  F4 key.

NOTE - Operation without thread monitor!

During normal production, the rest thread monitor or the top thread monitor should always be switched on as otherwise the sewing programm will not be stopped if the thread breaks.

■ Switching clamp position after end of seam on or off:

If this function is enabled, the closed clamp moves to the clamp transport end point after the end of the seam before releasing the sewing piece. To enable or disable this function:

- Press  F6 key.

D.3 Programming

D.3.11 Level 2 special parameters / Lists

Parameter settings for level 2 submenus
The following section describes the special parameters that are set in lists. When a submenu is requested, only those positions of the parameter list are displayed that refer to the machine function. All other positions of the entire parameter list can be browsed.

Browse through the list:

- Press ← or → key.

Move to a line in the list:

- Press ↑ or ↓ key.

Functions of the special parameter menu

F1 Back to start level
F3 Select start modes, list
F4 Set upper part parameters, list
F5 Set stitch lengths and bar tacks, list
F6 Parameters for clamp transport, list

■ **Selecting start modes:**
Four modes can be set in this menu:
- Start mode,
- Blowing mode,
- Holding stamp mode,
- Ejector stamp mode.

- Press 1 2 3 key.

Change parameters:

- Press ENT key.
- Insert new value using numeric keypad or
- Press ← or → key.

Confirm input:

- Press ENT key.

Settable values:

Start mode
The selected start mode determines how the machine operation is started and executed. Two modes are available:
- Mode 00,
- Mode 01.

The individual settings for machine operation are described in Section B.3.9, Machine operation.

Blowing mode
This mode determines if the function "Blow sewing piece off" is enabled or disabled after tucking.
- 00, disabled,
- 01, enabled.

D.3 Programming

D.3.11 Level 2 special parameters / Lists

Switching swivel stamp mode

NOTE - Enable function!

These parameters can only be set if the function "Switching swivel stamp" is enabled.

(D.4.5 Level 3 special parameters / Functions)

- Mode 00: After tucking, the Switching swivel stamp is lowered and fixes the sewing piece until the time programmed in positions 30 and 31 of the global parameter list has elapsed.
  The Switching swivel stamp does not swivel.
- Mode 01: After tucking, the Switching swivel stamp is lowered, fixes the sewing piece and swivels in accordance with the time values programmed in positions 30 and 31 of the global parameter list.

■ **Setting upper part parameters:**
This list is used for setting all parameters for functions of the sewing head.
The minimum and maximum values of input are limited by the program control unit. Values that are not within the limits will not be accepted but reduced to the corresponding minimum or maximum value.

- Press  key.

The parameter list is shown on the display.

NOTE - Sewing speed!

Possible settings for the sewing speed refer to the following sewing ranges:
- Sewing speed 1 to the start distance,
- sewing speed 2 to the center distance,
- sewing speed 3 to the end of the seam.

The speed is set in increments of 100 rpm.

■ **Setting stitch lengths and bar tacks:**
All settings for the configuration of the seam can be changed using this list.
The minimum and maximum values of input are limited by the program control unit. Values that are not within the limits will not be accepted but reduced to the corresponding minimum or maximum value.

- Press  key.

The parameter list is shown on the display.

■ **Parameters for clamp transport:**
This list is used to make all settings for the clamp movement.

- Press  key.

The parameter list shown on the display has the following function:
01 Clamp insertion as seen from right end of rail
02 Stop position 600 mm is a safety value. Only values higher than 600 mm can be input
03 Settable range: 35 % - 80 %
04 Settable range: 35 % - 99 %
05 Range of the curve where no sewing is effected. If value "0" is input here, the sewing process starts immediately.

beisler
SEWING

DÜRKOPP ADLER AG
Potsdamer Straße 190
33719 Bielefeld
GERMANY
Phone +49 (0) 521 / 925-00
E-mail marketing@duerkopp-adler.com
www.duerkopp-adler.com